KiliManjaro

CS Build(A02)

2008.02.04

DATE	CHANGE NO.	REV

	EE	DATE	POWER	DATE
DRAWER				
DESIGN				
CHECK				
RESPONSIBLE				

SIZE = 3 VER :

FILE NAME : XXXX-XXXXXX-XX

P/N XXXXXXXXXXXX

INVENTEC

TITLE *KiliManjaro*

SIZE	CODE	DOC. NUMBER	REV
A3	CS	*Model_No*	*X01*

SHEET 1 OF 58

http://hobi-elektronika.net

TABLE OF CONTENTS

PAGE

MAINBOARD

1.COVER PAGE
2.INDEX
3.BLOCK DIAGRAM
4.POWER SEQUENCE BLOCK
5-12.SYSTEM POWER
13.CLOCK GENERATOR
14-17.CPU Merom
18.FAN & THERMAL CONTROLLER
19-25.N/B Calistoga
26.DDR2 DIMM0
27.DDR2 DIMM1
28.DDR DAMPING
29.MXM CONN
30.CRT CONN
31.HDMI CONN
32.LCD CONN
33-37.S/B ICH8
38.EXPRESS CARD

PAGE

39.CARD READER
40.LAN CONTROLLER
41.RJ45 & TRANSFORMER
42.MINI CARD CONN
43.ODD & HDD CONN
44.USB CONN
45.BT & LED & CIR & SW
46.KBC
47.CODEC
48-49.AUDIO AMP&JACK
50.MDC
51.SCREW & EMI
52.TO OTHER BOARD CONN

PAGE

SMALL BOARD

53.IO BOARD(TV Turner or Robson)
54.USB & TV BOARD
55.PWR JACK LED BOARD
56.PWR BUTTON & LID BOARD
57.E-KEY BOARD
58.TH-BUTTON BOARD
59.HOTKEY BOARD

http://hobi-elektronika.net

INVENTEC			
TITLE KiliManjaro			
SIZE A3	CODE CS	DOC. NUMBER Model_No	REV X01
CHANGE by Erison	12-Dec-2007	SHEET 2 OF 58	

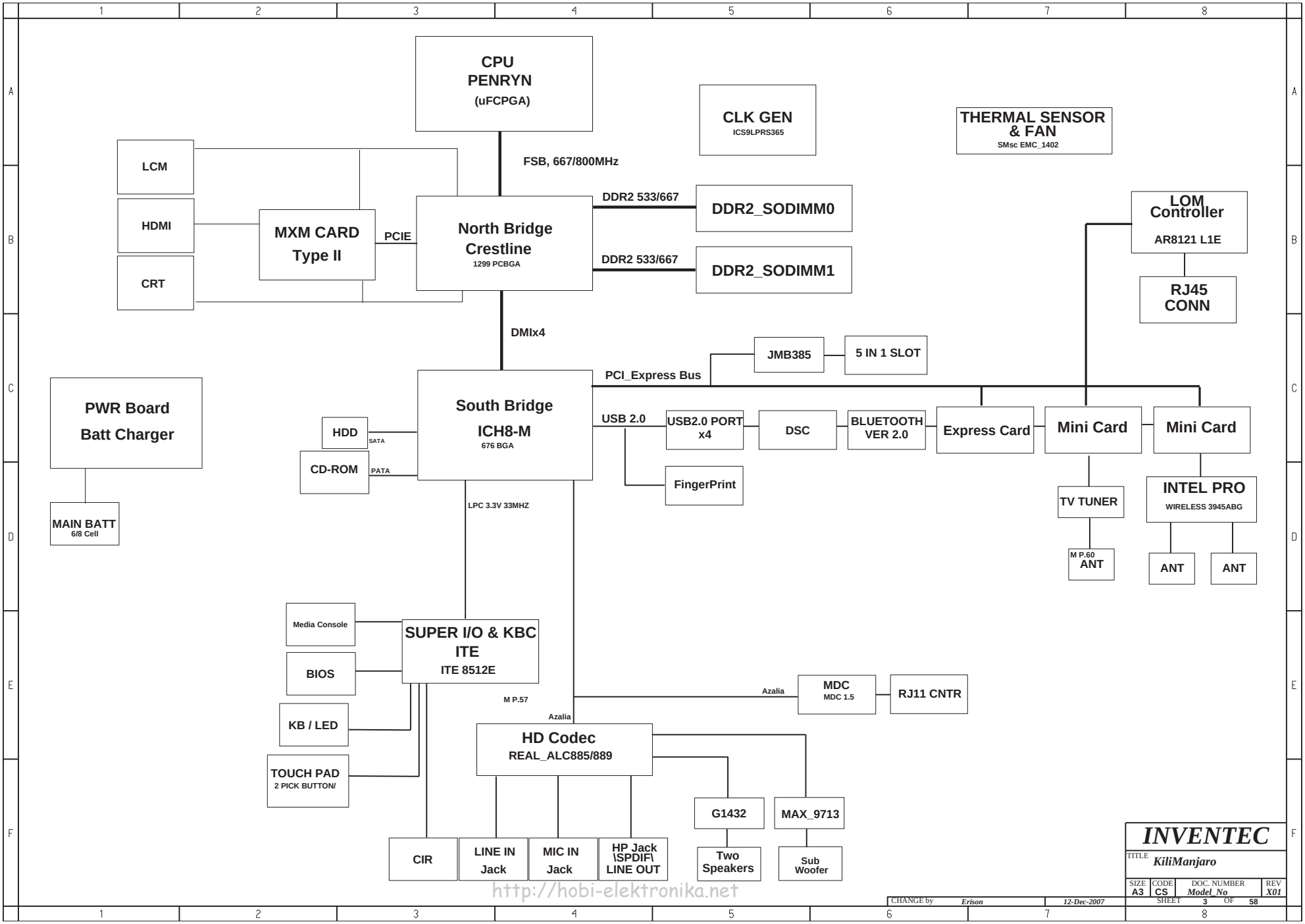

http://hobi-elektronika.net

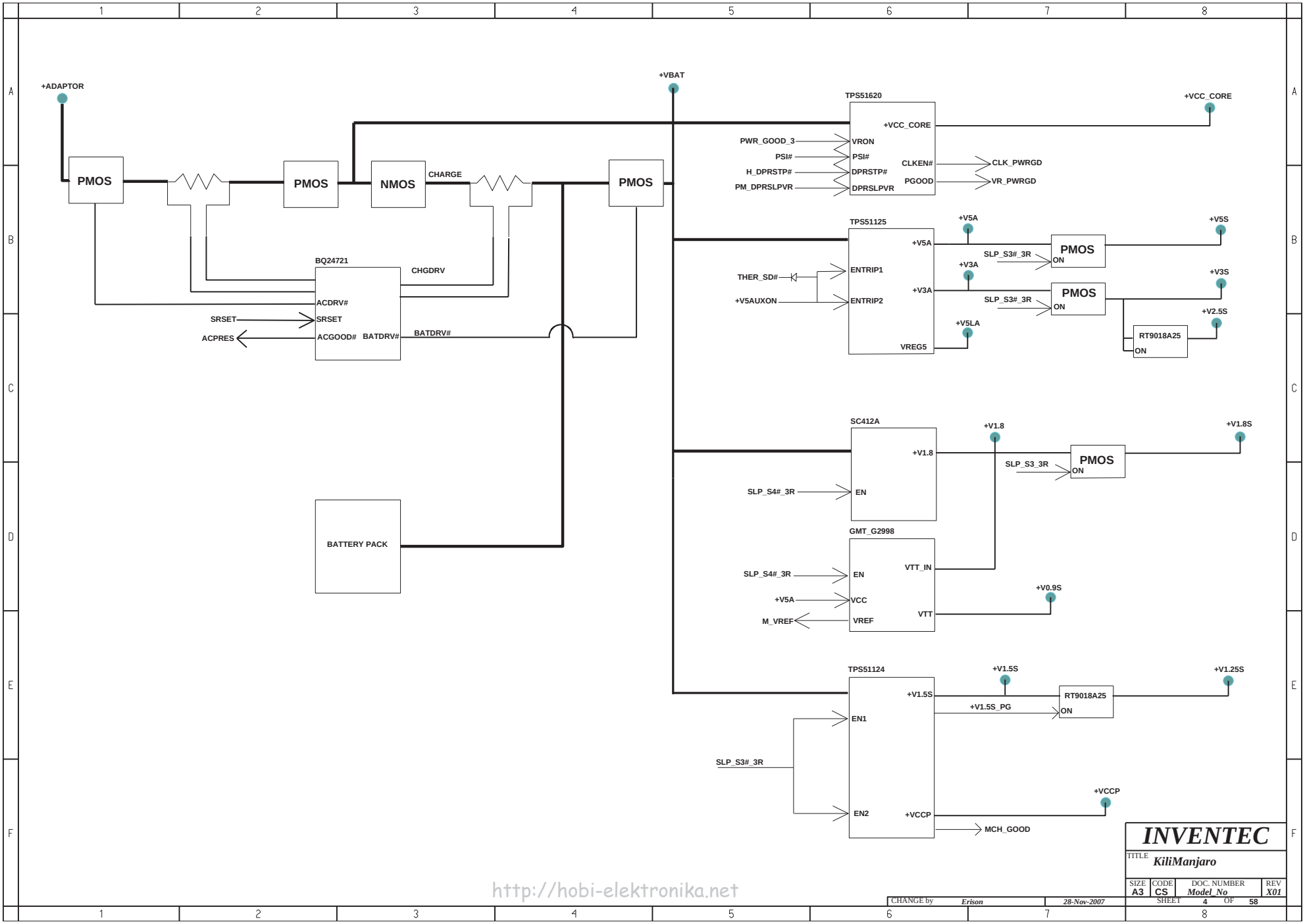

http://hobi-elektronika.net

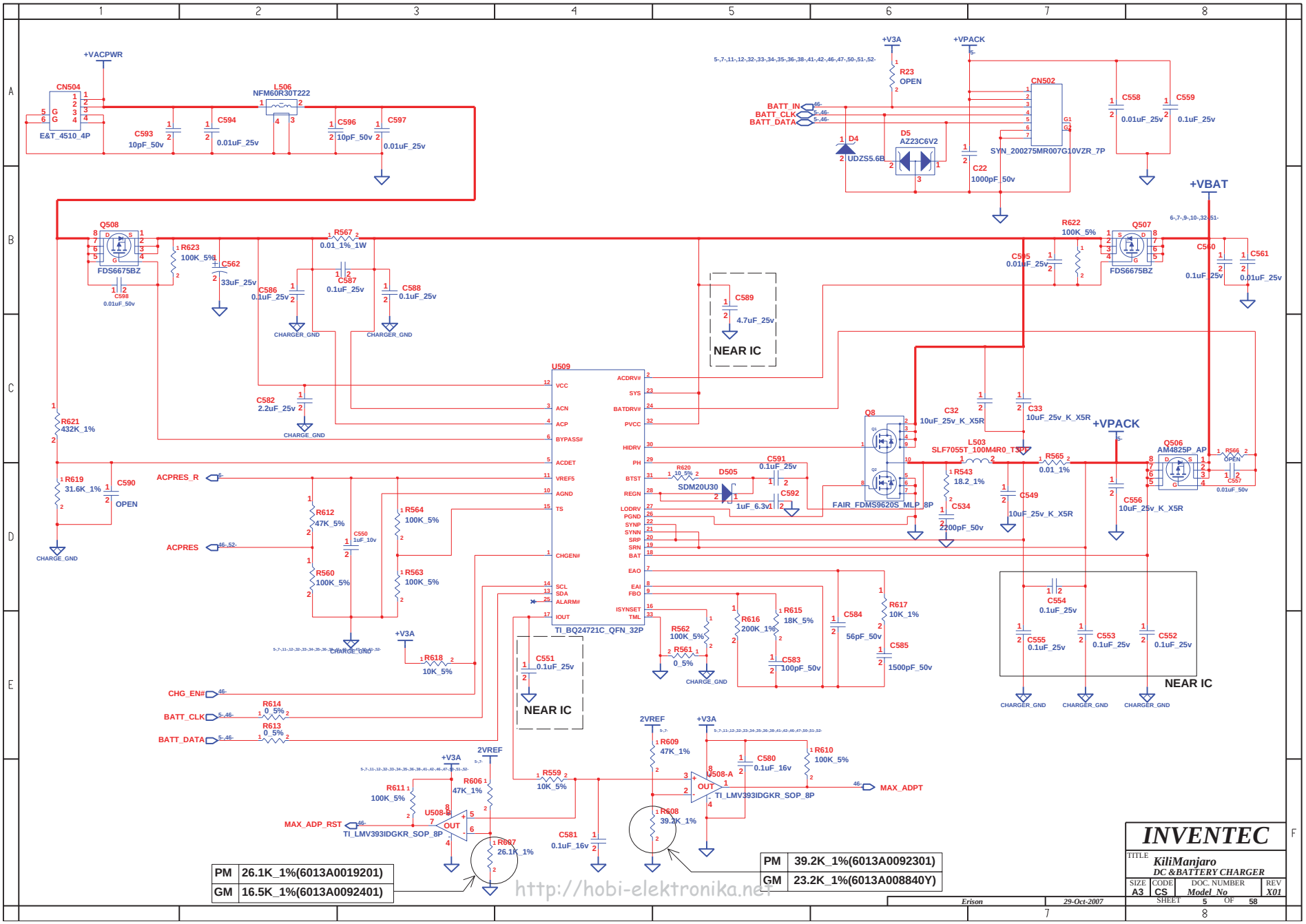

http://hobi-elektronika.net

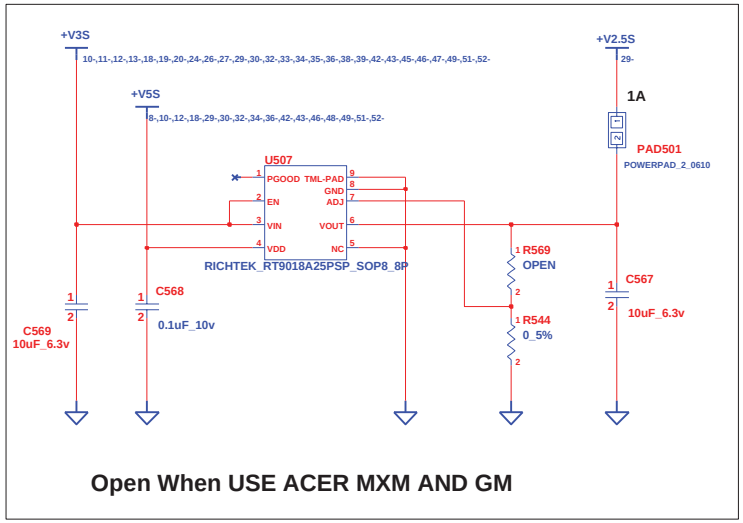

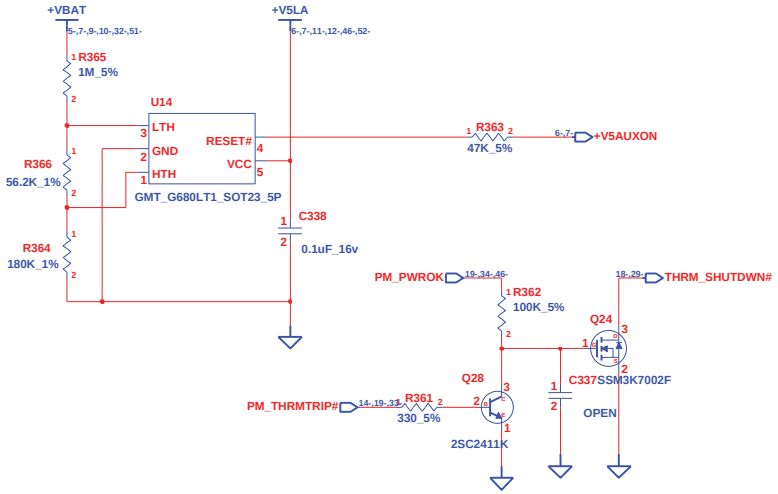

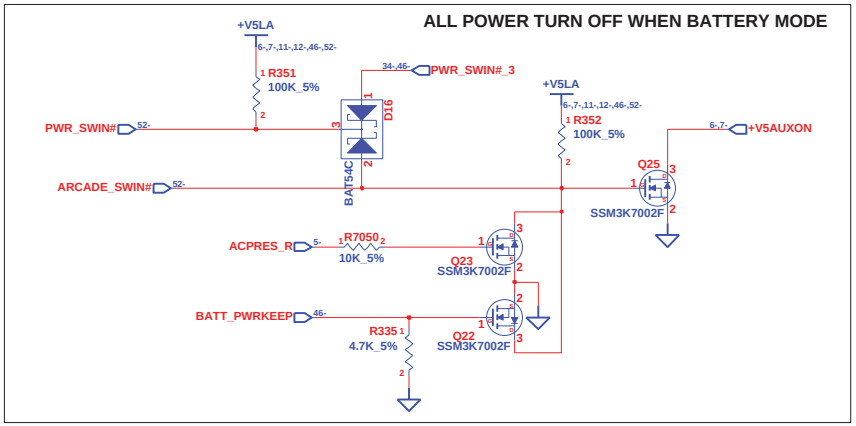

http://hobi-elektronika.net

INVENTEC			
TITLE: KiliManjaro +V2.5S / RESET			
SIZE: A3	CODE: CS	DOC. NUMBER: Model_No	REV: X01
CHANGE by: Erison	10-Jan-2008	SHEET 6 OF 58	

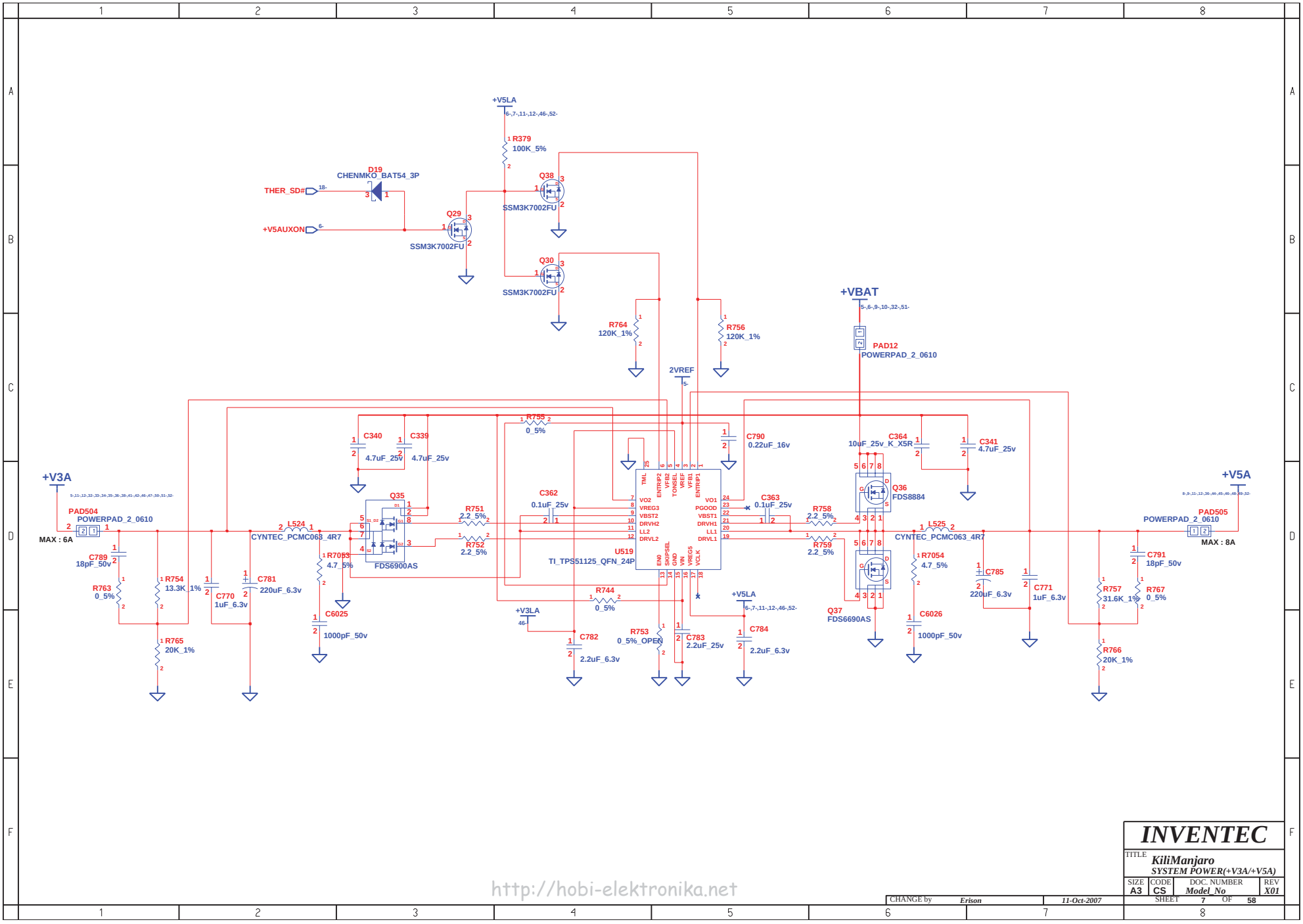

INVENTEC

TITLE: *KiliManjaro*
SYSTEM POWER(+V3A/+V5A)

SIZE	CODE	DOC. NUMBER	REV
A3	CS	*Model_No*	*X01*

CHANGE by *Erison* *11-Oct-2007*

SHEET 7 OF 58

http://hobi-elektronika.net

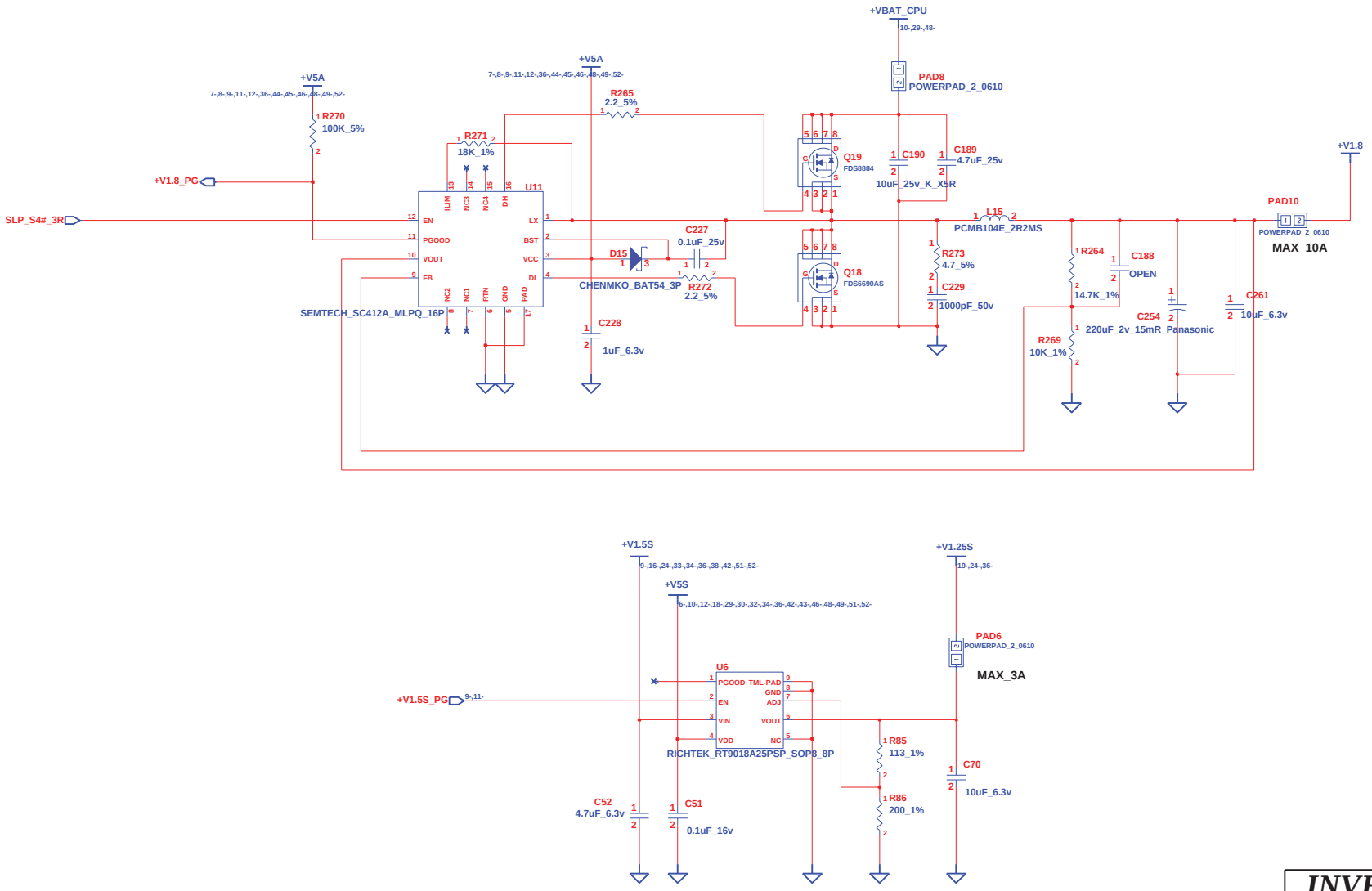

http://hobi-elektronika.net

INVENTEC					
TITLE	KiliManjaro SYSTEM POWER (+V1.8 / +V1.25S)				
SIZE	CODE	DOC. NUMBER	REV		
A3	CS	Model_No	X01		
CHANGE by	Erison	11-Oct-2007	SHEET 8 OF 58		

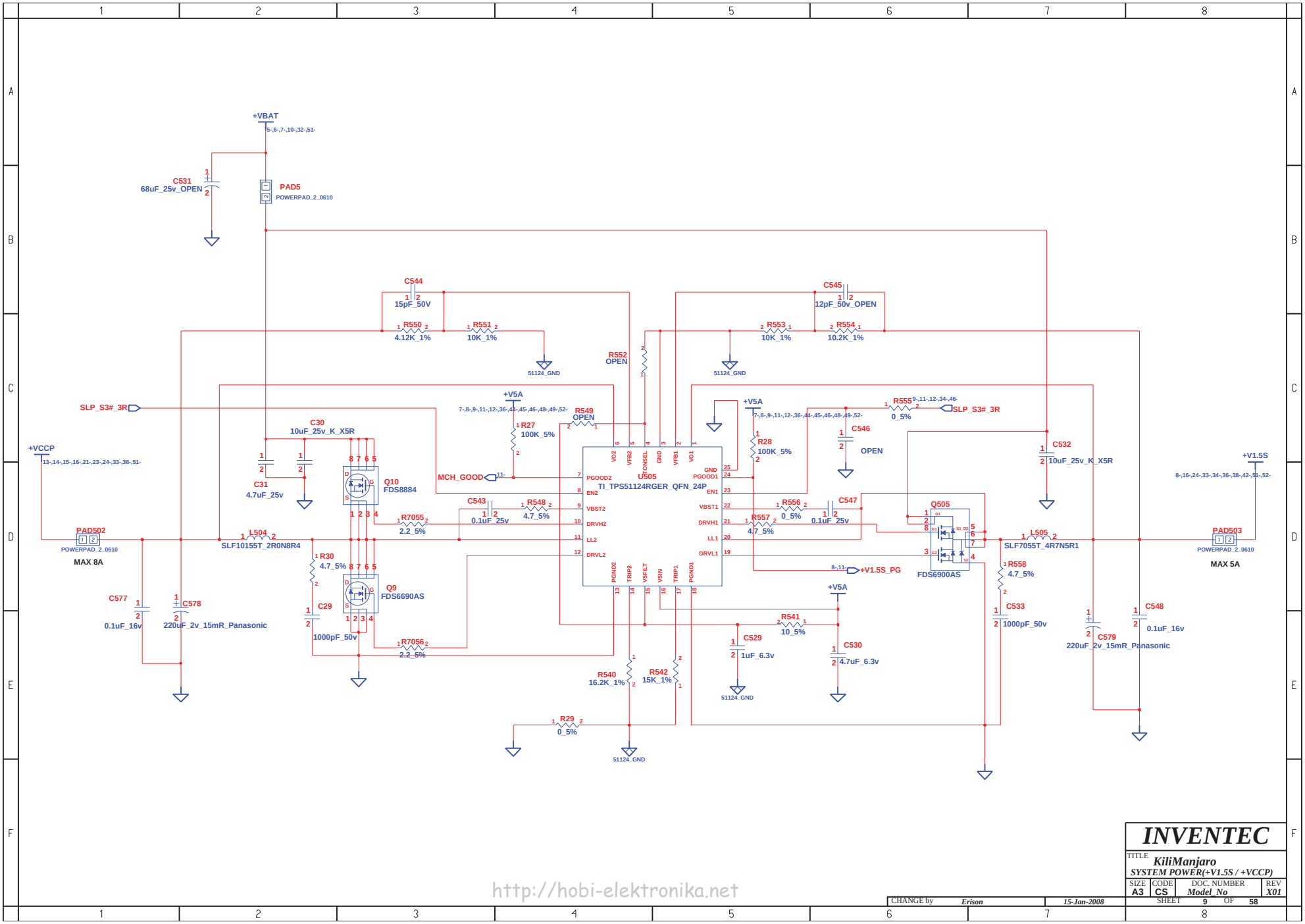

INVENTEC

TITLE
KiliManjaro
SYSTEM POWER(+V1.5S / +VCCP)

SIZE	CODE	DOC. NUMBER	REV
A3	CS	Model_No	X01

CHANGE by Erison 15-Jan-2008

SHEET 9 OF 58

http://hobi-elektronika.net

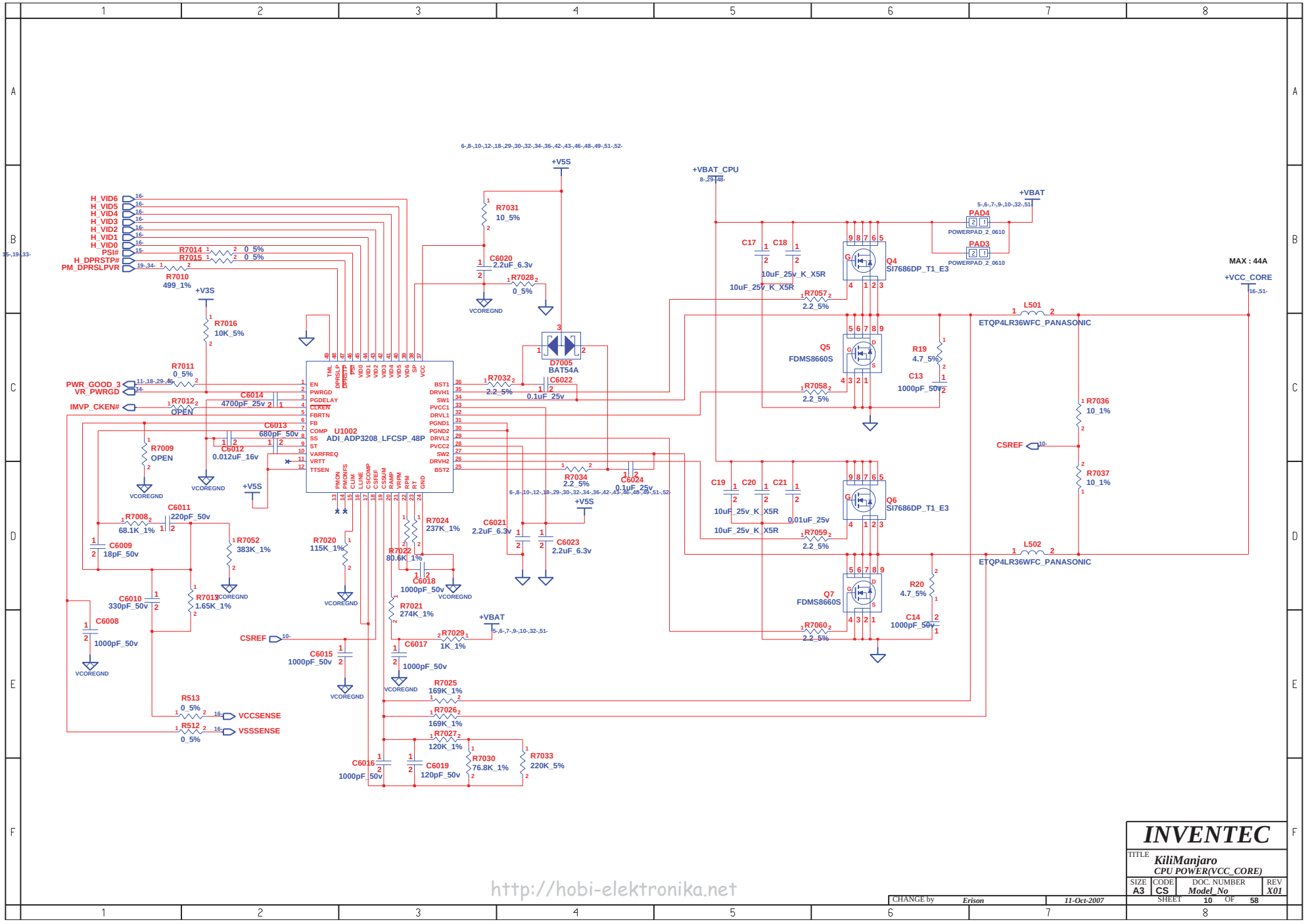

INVENTEC			
TITLE: KiliManjaro CPU POWER(VCC_CORE)			
SIZE A3	CODE CS	DOC. NUMBER Model_No	REV X01
CHANGE by Erison	11-Oct-2007	SHEET 10 OF 58	

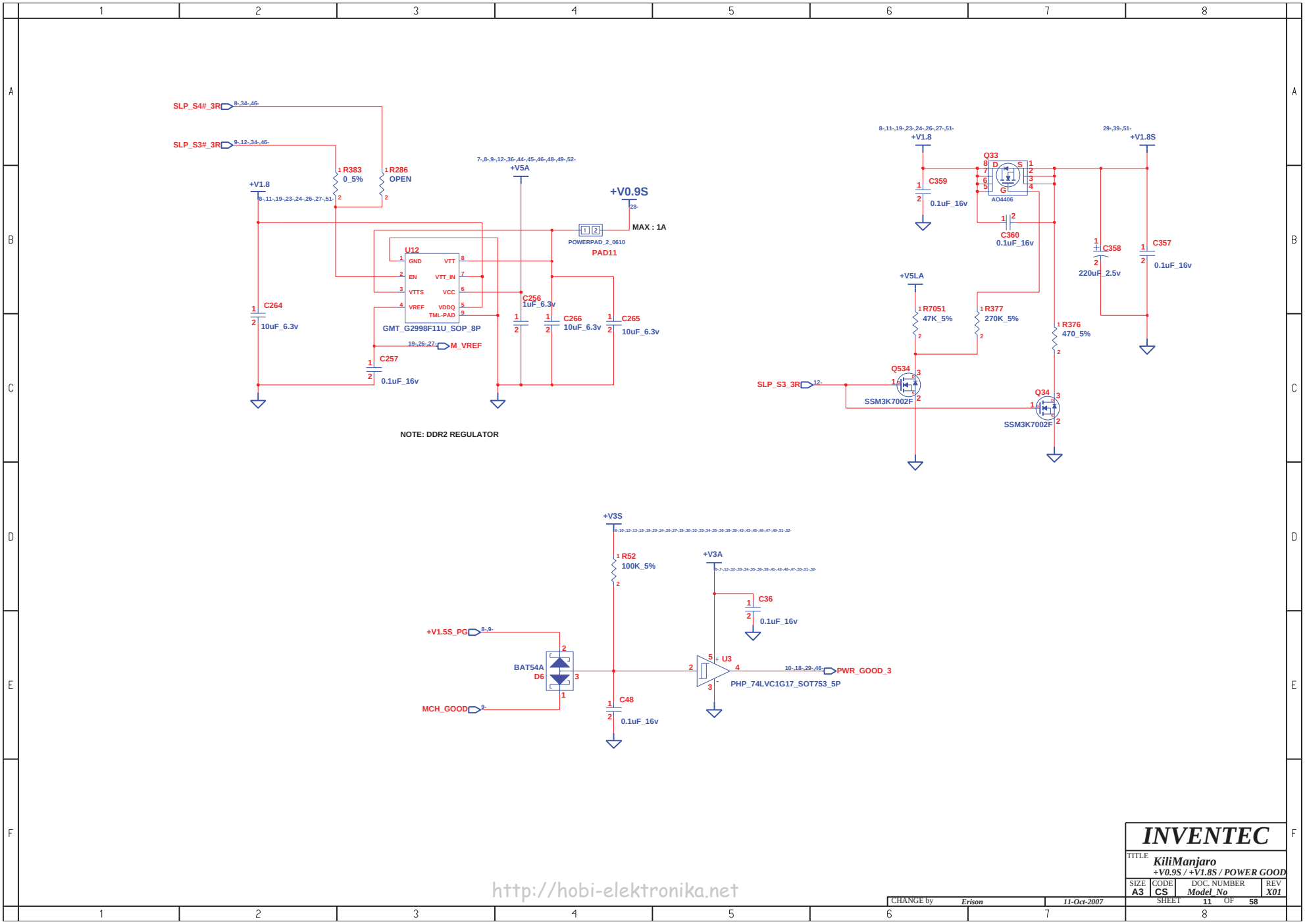

http://hobi-elektronika.net

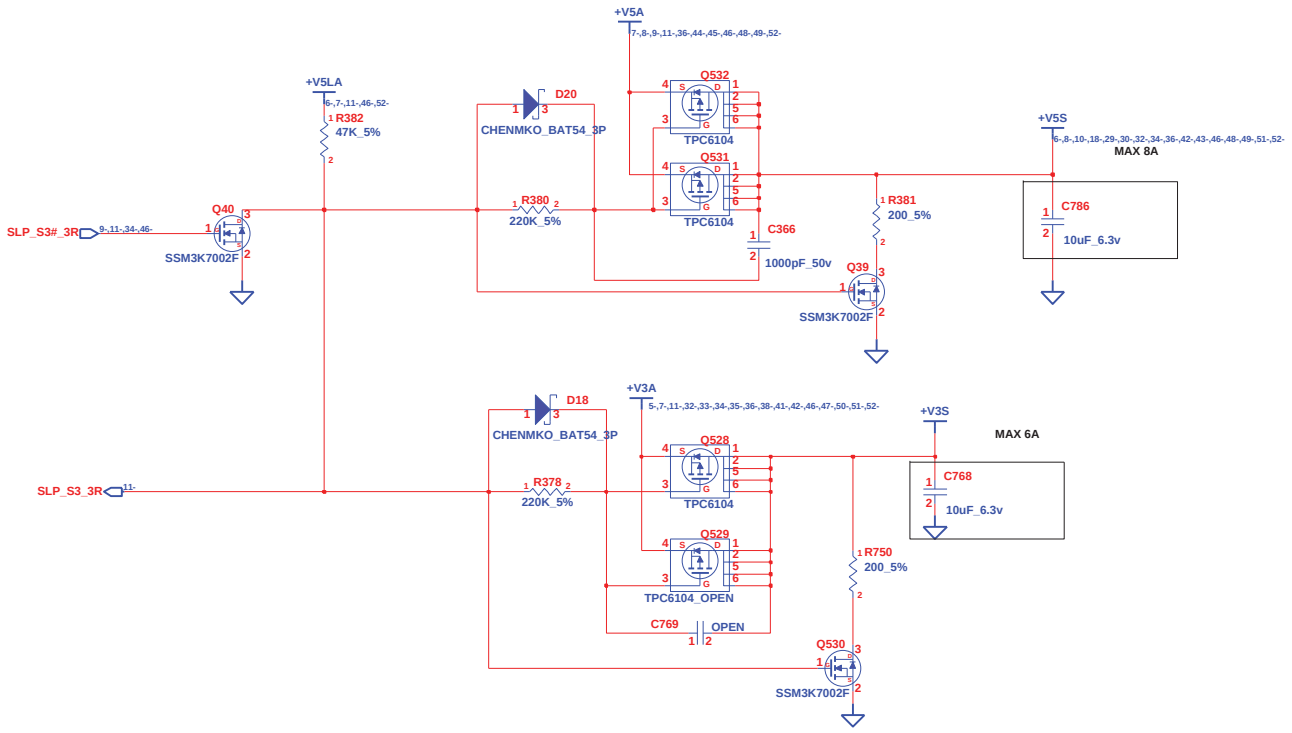

http://hobi-elektronika.net

INVENTEC			
TITLE	KiliManjaro POWER(+V3S / +V5S)		
SIZE A3	CODE CS	DOC. NUMBER Model_No	REV X01
CHANGE by Erison	11-Oct-2007	SHEET 12 OF 58	

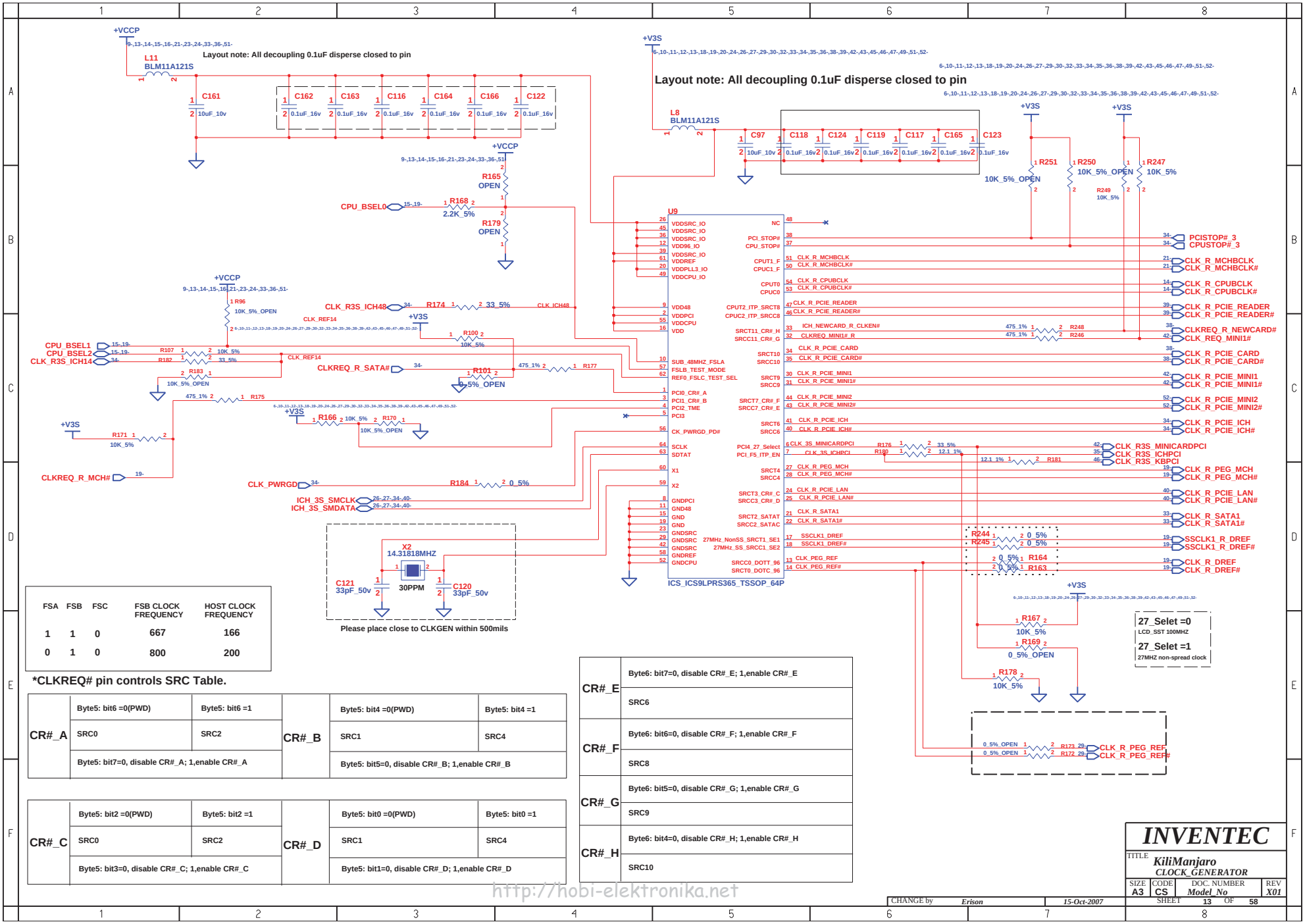

FSA	FSB	FSC	FSB CLOCK FREQUENCY	HOST CLOCK FREQUENCY
1	1	0	667	166
0	1	0	800	200

***CLKREQ# pin controls SRC Table.**

CR#_A	Byte5: bit6 =0(PWD)	Byte5: bit6 =1	CR#_B	Byte5: bit4 =0(PWD)	Byte5: bit4 =1
	SRC0	SRC2		SRC1	SRC4
	Byte5: bit7=0, disable CR#_A; 1,enable CR#_A			Byte5: bit5=0, disable CR#_B; 1,enable CR#_B	

CR#_C	Byte5: bit2 =0(PWD)	Byte5: bit2 =1	CR#_D	Byte5: bit0 =0(PWD)	Byte5: bit0 =1
	SRC0	SRC2		SRC1	SRC4
	Byte5: bit3=0, disable CR#_C; 1,enable CR#_C			Byte5: bit1=0, disable CR#_D; 1,enable CR#_D	

CR#_E	Byte6: bit7=0, disable CR#_E; 1,enable CR#_E
	SRC6
CR#_F	Byte6: bit6=0, disable CR#_F; 1,enable CR#_F
	SRC8
CR#_G	Byte6: bit5=0, disable CR#_G; 1,enable CR#_G
	SRC9
CR#_H	Byte6: bit4=0, disable CR#_H; 1,enable CR#_H
	SRC10

http://hobi-elektronika.net

CHANGE by	Erison	15-Oct-2007	

INVENTEC

TITLE *KiliManjaro* *CLOCK_GENERATOR*

SIZE	CODE	DOC. NUMBER	REV
A3	CS	Model_No	X01

SHEET 13 OF 58

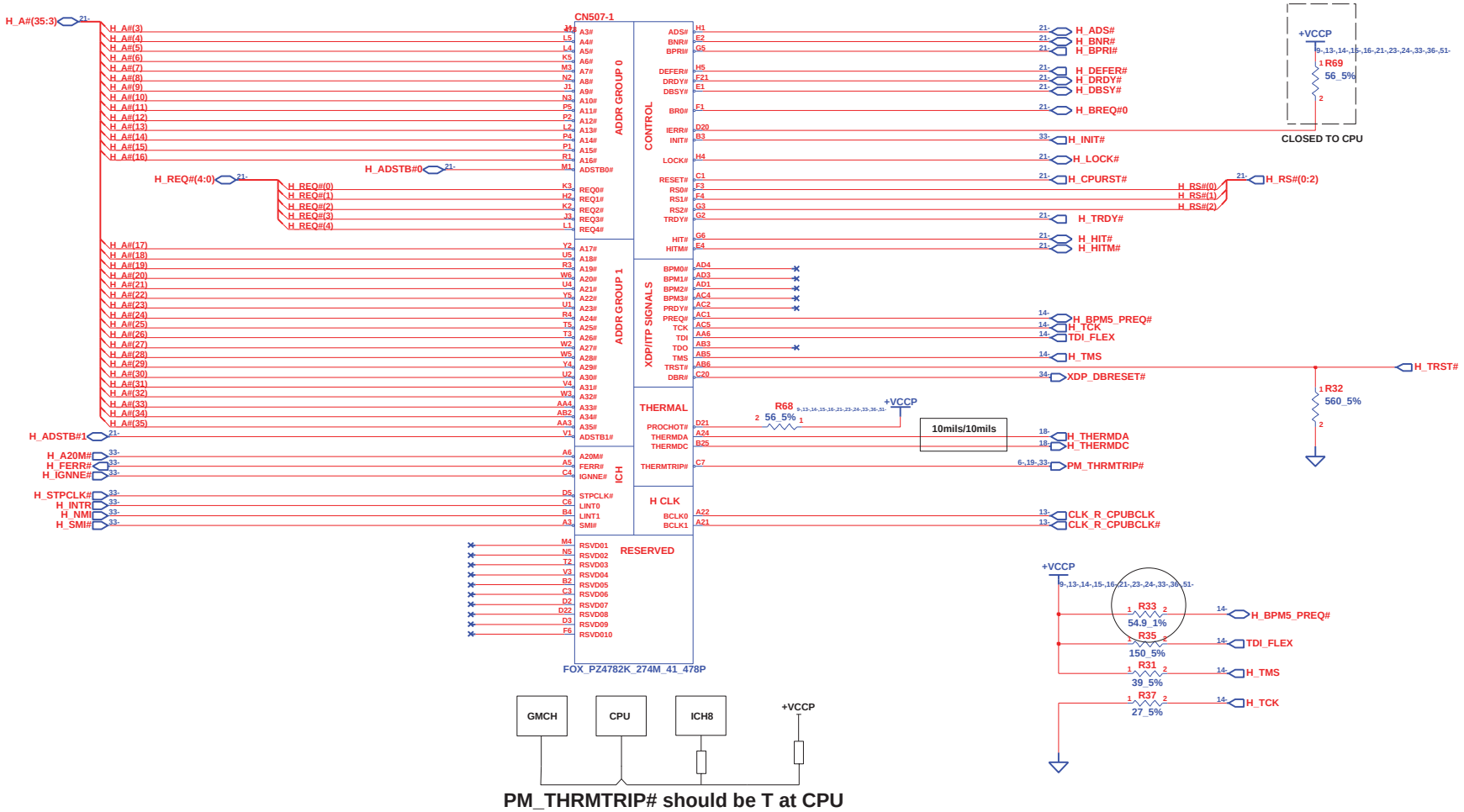

PM_THRMTRIP# should be T at CPU

http://hobi-elektronika.net

CHANGE by	Erison	2-Oct-2007	

INVENTEC

TITLE: *KiliManjaro*
Merom-1

SIZE	CODE	DOC. NUMBER	REV
A3	CS	*Model_No*	*X01*

SHEET 14 OF 58

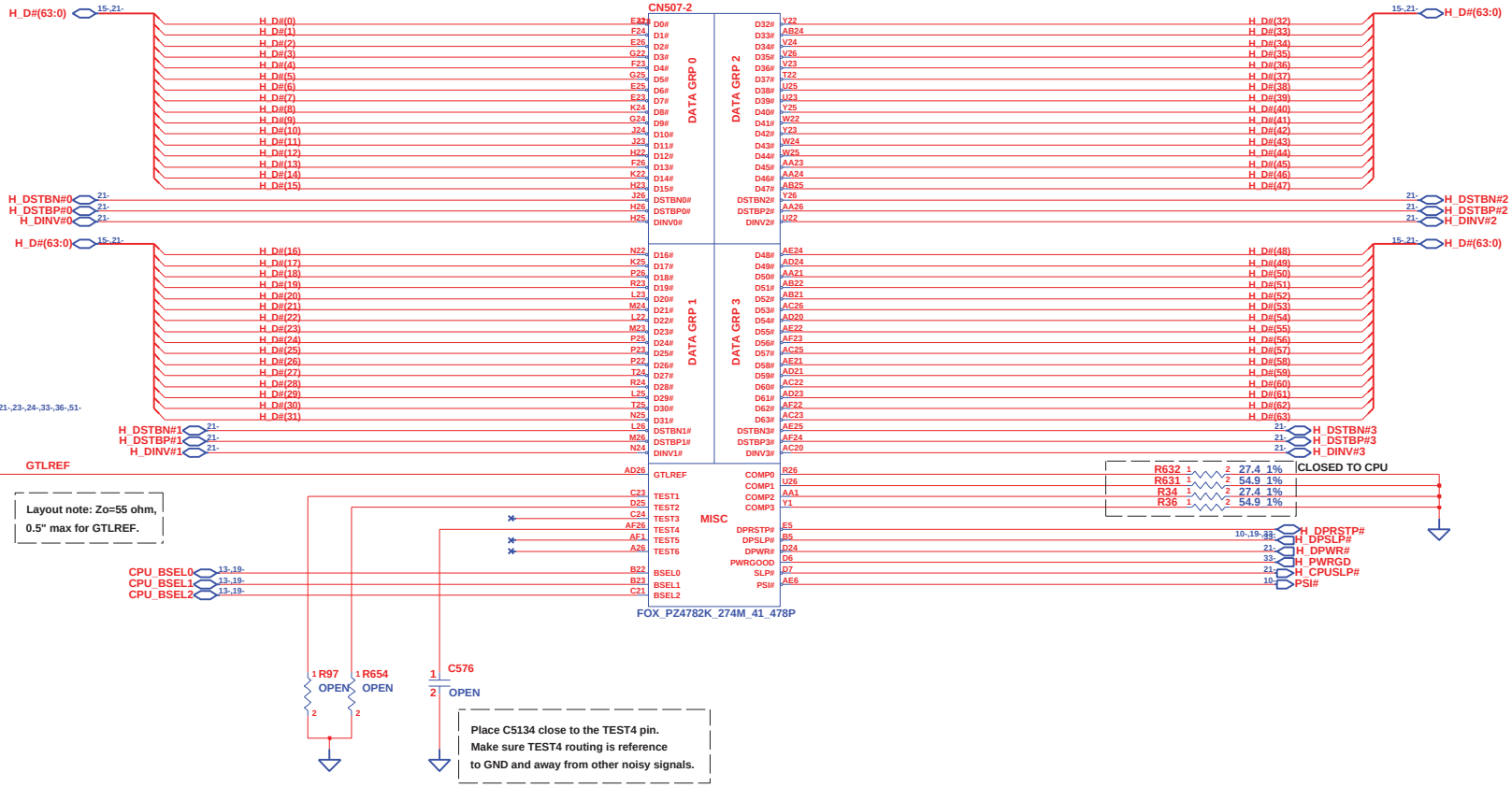

INVENTEC			
TITLE KiliManjaro Merom-2			
SIZE A3	CODE CS	DOC. NUMBER Model_No	REV X01
CHANGE by Erison	16-Oct-2007	SHEET 15 OF 58	

http://hobi-elektronika.net

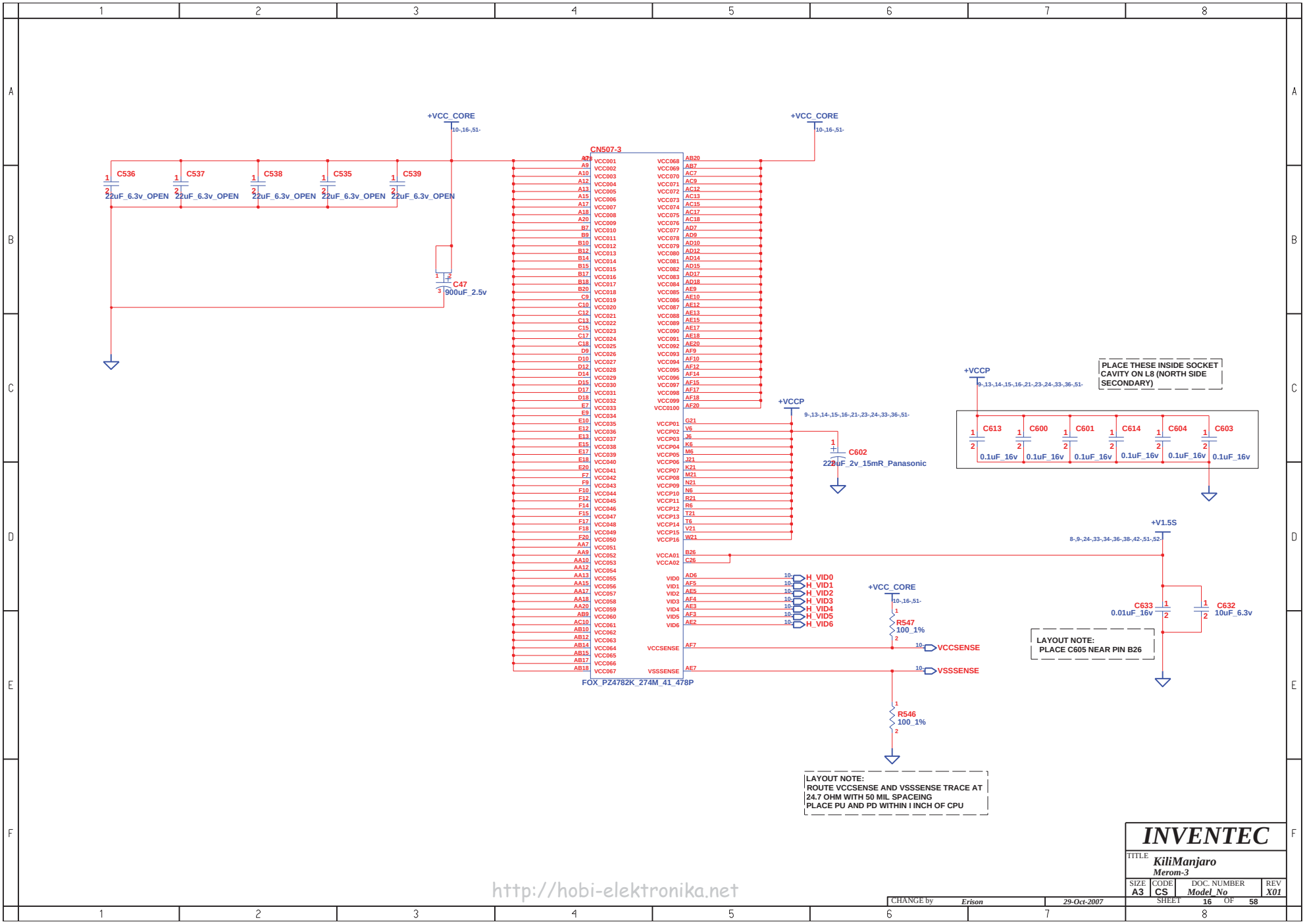

http://hobi-elektronika.net

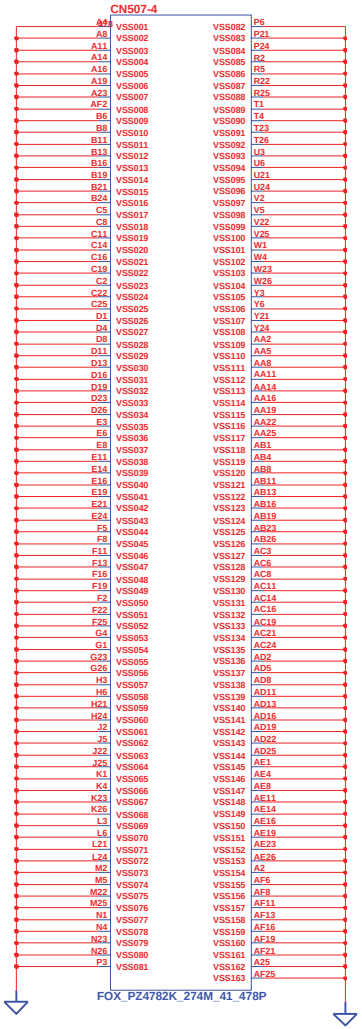

http://hobi-elektronika.net

CHANGE by	Erison	2-Oct-2007	

INVENTEC

TITLE *KiliManjaro*
Merom-4

SIZE	CODE	DOC. NUMBER	REV
A3	CS	Model_No	X01

SHEET 17 OF 58

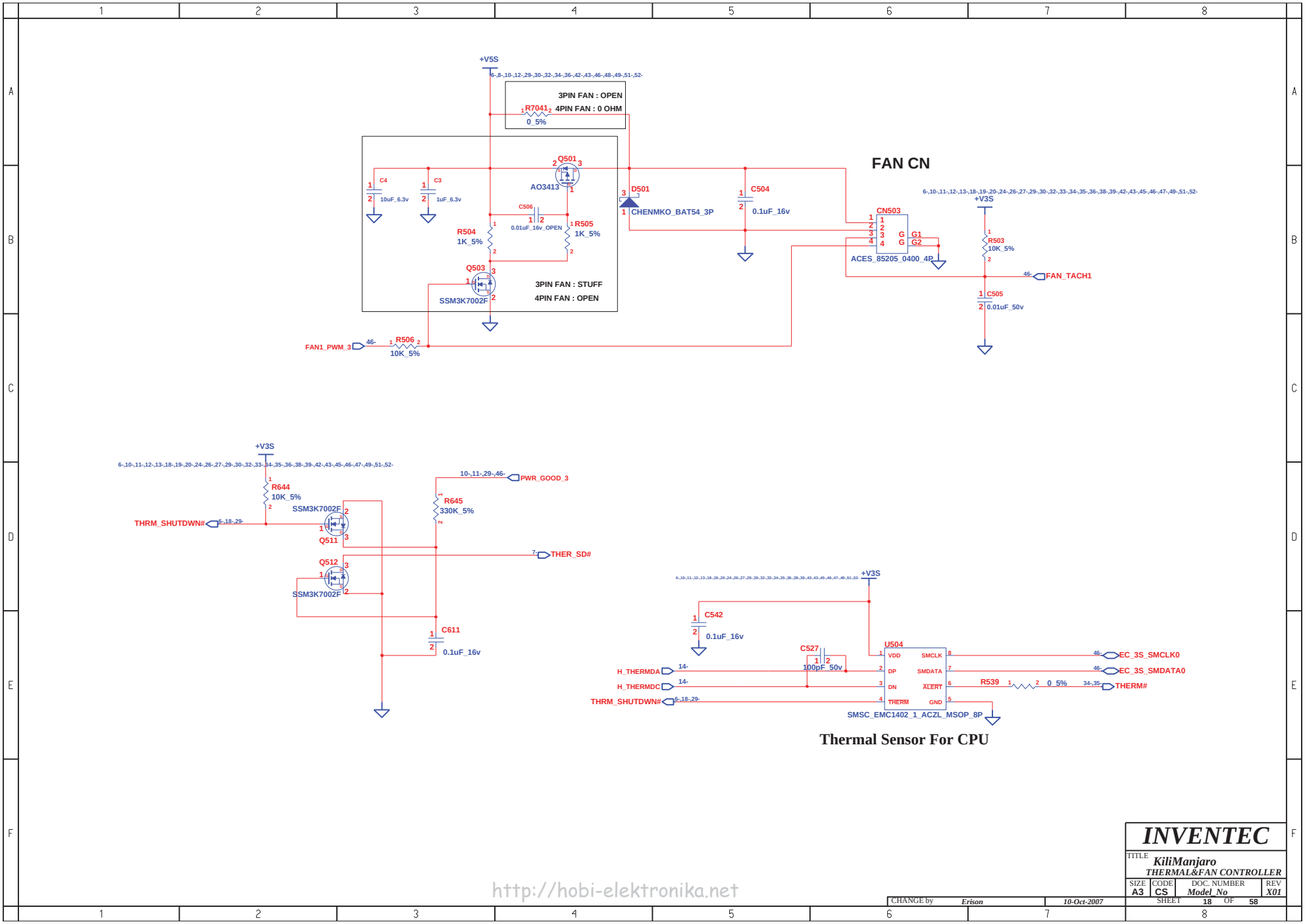
+V5S
3PIN FAN : OPEN
4PIN FAN : 0 OHM
R7041
0_5%
Q501
AO3413
C4
10uF_6.3v
C3
1uF_6.3v
C506
0.01uF_16v_OPEN
R504
1K_5%
R505
1K_5%
D501
CHENMKO_BAT54_3P
C504
0.1uF_16v
Q503
SSM3K7002F
3PIN FAN : STUFF
4PIN FAN : OPEN
FAN1_PWM_3
R506
10K_5%
FAN CN
CN503
ACES_85205_0400_4P
+V3S
R503
10K_5%
FAN_TACH1
C505
0.01uF_50v
R644
10K_5%
THRM_SHUTDWN#
Q511
Q512
SSM3K7002F
R645
330K_5%
PWR_GOOD_3
THER_SD#
C611
0.1uF_16v
C542
0.1uF_16v
C527
100pF_50v
U504
VDD
DP
DN
THERM
SMCLK
SMDATA
ALERT
GND
H_THERMDA
H_THERMDC
THRM_SHUTDWN#
EC_3S_SMCLK0
EC_3S_SMDATA0
R539
0_5%
THERM#
SMSC_EMC1402_1_ACZL_MSOP_8P
Thermal Sensor For CPU
INVENTEC
TITLE
KiliManjaro
THERMAL&FAN CONTROLLER
SIZE A3
CODE CS
DOC. NUMBER Model_No
REV X01
CHANGE by Erison
10-Oct-2007
SHEET 18 OF 58
http://hobi-elektronika.net

MCH_CFG(5)	LOW=DMIx2 HIGH=DMIx4

MCH_CFG(7) (CPU Strap)	LOW=RSVD HIGH=Mobile CPU

MCH_CFG(9) PCIE Graphics Lane	LOW=Reverse Lane HIGH=Normal operation

MCH_CFG(11) PSB 4X CLK ENABLE	LOW=CALISTOGA HIGH=RESERVED

MCH_CFG(13:12) XOR/ALLZ	00=PARTIAL CLOCK GATING DISABLE 01=XOR MODE ENABLE 10=ALL-Z MODE ENABLE 11=NORMAL OPERATION

MCH_CFG(16) (FSB Dynamic ODT)	LOW=Dynamic ODT Disable HIGH=Dynamic ODT Enable

NOTE: CFG[2:0] STRP : 001b : 533 MT/S
011b : 667 MT/S

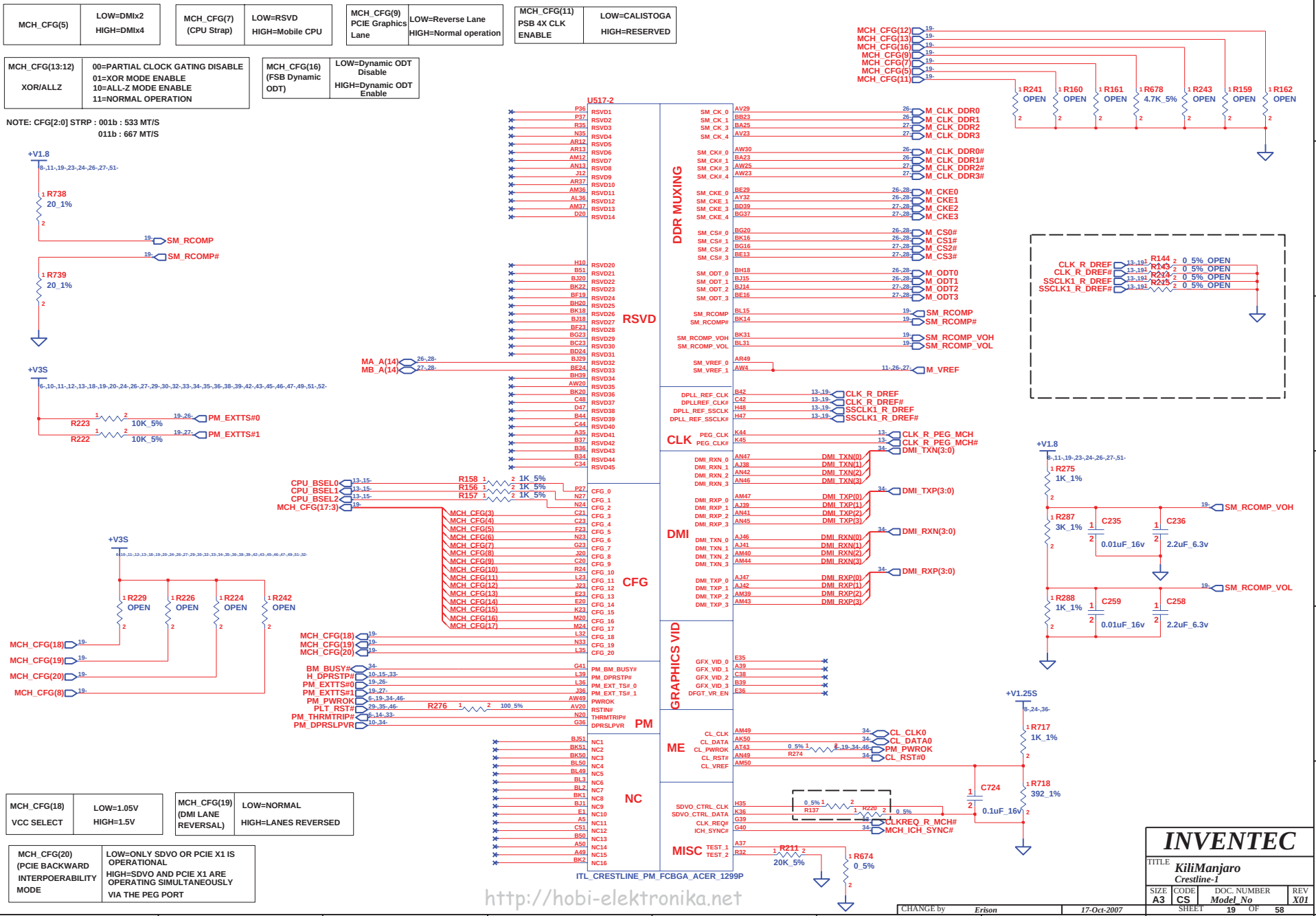

MCH_CFG(18) VCC SELECT	LOW=1.05V HIGH=1.5V

MCH_CFG(19) (DMI LANE REVERSAL)	LOW=NORMAL HIGH=LANES REVERSED

MCH_CFG(20) (PCIE BACKWARD INTERPOERABILITY MODE	LOW=ONLY SDVO OR PCIE X1 IS OPERATIONAL HIGH=SDVO AND PCIE X1 ARE OPERATING SIMULTANEOUSLY VIA THE PEG PORT

http://hobi-elektronika.net

CHANGE by	Erison	17-Oct-2007	

INVENTEC

TITLE: KiliManjaro
Crestline-1

SIZE	CODE	DOC. NUMBER	REV
A3	CS	Model_No	X01

SHEET 19 OF 58

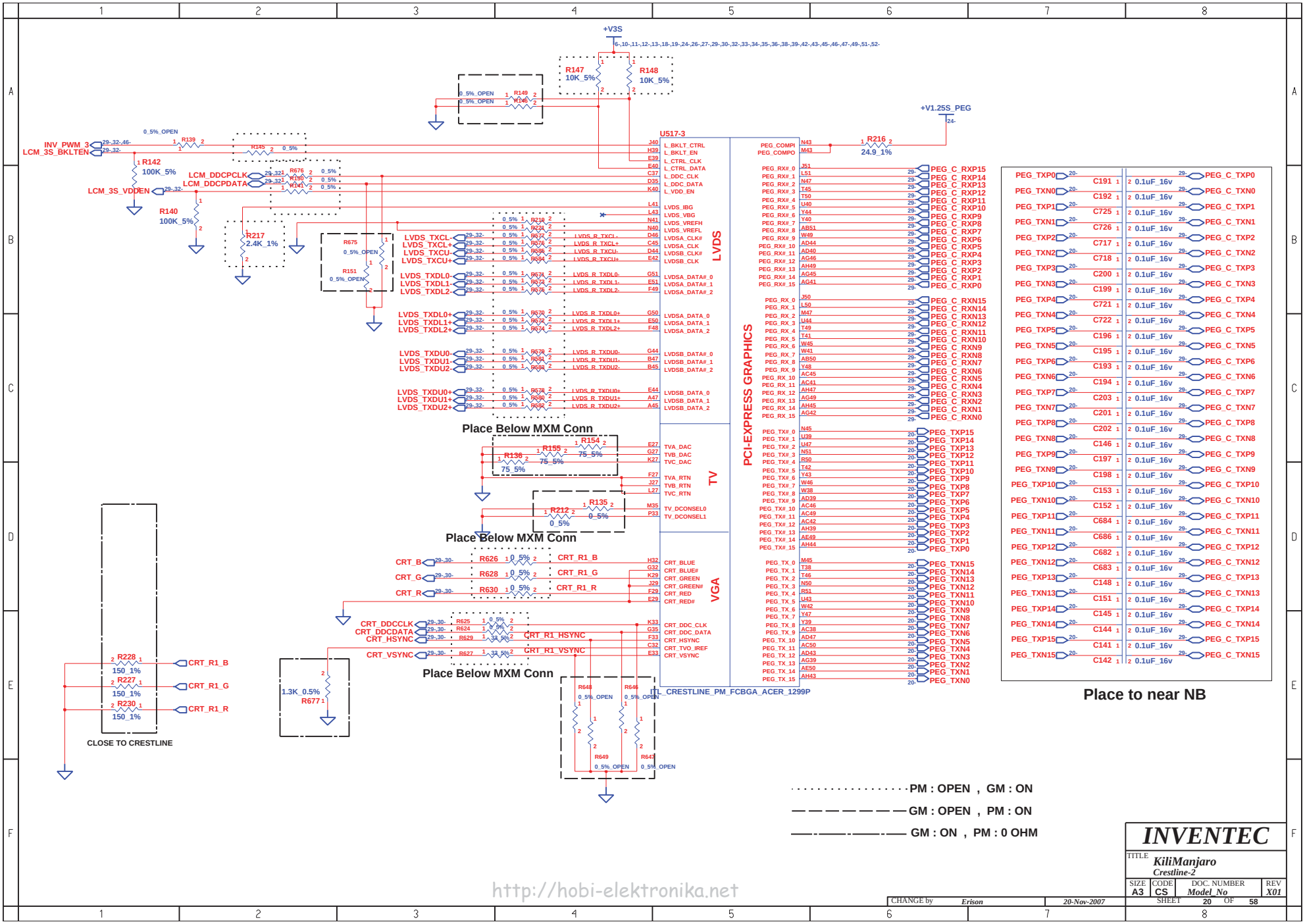
+V3S
R147 10K_5%
R148 10K_5%
R149
R146
INV_PWM_3
LCM_3S_BKLTEN
R139
R142 100K_5%
LCM_3S_VDDEN
R140 100K_5%
LCM_DDCPCLK
LCM_DDCPDATA
R676
R677
R217 2.4K_1%
R675
R151
U517-3
LVDS
LVDS_TXCL-
LVDS_TXCL+
LVDS_TXCU-
LVDS_TXCU+
LVDS_TXDL0-
LVDS_TXDL1-
LVDS_TXDL2-
LVDS_TXDL0+
LVDS_TXDL1+
LVDS_TXDL2+
LVDS_TXDU0-
LVDS_TXDU1-
LVDS_TXDU2-
LVDS_TXDU0+
LVDS_TXDU1+
LVDS_TXDU2+
Place Below MXM Conn
TV
R154 75_5%
R155 75_5%
R136 75_5%
R135 0_5%
R212 0_5%
Place Below MXM Conn
VGA
CRT_B
CRT_G
CRT_R
R626
R628
R630
CRT_R1_B
CRT_R1_G
CRT_R1_R
CRT_DDCCLK
CRT_DDCDATA
CRT_HSYNC
CRT_VSYNC
R625
R624
R629
R627
CRT_R1_HSYNC
CRT_R1_VSYNC
Place Below MXM Conn
R228 150_1%
R227 150_1%
R230 150_1%
CRT_R1_B
CRT_R1_G
CRT_R1_R
CLOSE TO CRESTLINE
1.3K_0.5% R677
R648
R646
R649
R647
PCI-EXPRESS GRAPHICS
ITL_CRESTLINE_PM_FCBGA_ACER_1299P
+V1.25S_PEG
R216 24.9_1%
PEG_C_RXP15
PEG_C_RXP14
PEG_C_RXP13
PEG_C_RXP12
PEG_C_RXP11
PEG_C_RXP10
PEG_C_RXP9
PEG_C_RXP8
PEG_C_RXP7
PEG_C_RXP6
PEG_C_RXP5
PEG_C_RXP4
PEG_C_RXP3
PEG_C_RXP2
PEG_C_RXP1
PEG_C_RXP0
PEG_C_RXN15
PEG_C_RXN14
PEG_C_RXN13
PEG_C_RXN12
PEG_C_RXN11
PEG_C_RXN10
PEG_C_RXN9
PEG_C_RXN8
PEG_C_RXN7
PEG_C_RXN6
PEG_C_RXN5
PEG_C_RXN4
PEG_C_RXN3
PEG_C_RXN2
PEG_C_RXN1
PEG_C_RXN0
PEG_TXP15
PEG_TXP14
PEG_TXP13
PEG_TXP12
PEG_TXP11
PEG_TXP10
PEG_TXP9
PEG_TXP8
PEG_TXP7
PEG_TXP6
PEG_TXP5
PEG_TXP4
PEG_TXP3
PEG_TXP2
PEG_TXP1
PEG_TXP0
PEG_TXN15
PEG_TXN14
PEG_TXN13
PEG_TXN12
PEG_TXN11
PEG_TXN10
PEG_TXN9
PEG_TXN8
PEG_TXN7
PEG_TXN6
PEG_TXN5
PEG_TXN4
PEG_TXN3
PEG_TXN2
PEG_TXN1
PEG_TXN0
C191 0.1uF_16v
C192 0.1uF_16v
C725 0.1uF_16v
C726 0.1uF_16v
C717 0.1uF_16v
C718 0.1uF_16v
C200 0.1uF_16v
C199 0.1uF_16v
C721 0.1uF_16v
C722 0.1uF_16v
C196 0.1uF_16v
C195 0.1uF_16v
C193 0.1uF_16v
C194 0.1uF_16v
C203 0.1uF_16v
C201 0.1uF_16v
C202 0.1uF_16v
C146 0.1uF_16v
C197 0.1uF_16v
C198 0.1uF_16v
C153 0.1uF_16v
C152 0.1uF_16v
C684 0.1uF_16v
C686 0.1uF_16v
C682 0.1uF_16v
C683 0.1uF_16v
C148 0.1uF_16v
C151 0.1uF_16v
C145 0.1uF_16v
C144 0.1uF_16v
C141 0.1uF_16v
C142 0.1uF_16v
Place to near NB
PM : OPEN , GM : ON
GM : OPEN , PM : ON
GM : ON , PM : 0 OHM
INVENTEC
TITLE KiliManjaro
Crestline-2
SIZE A3
CODE CS
DOC. NUMBER Model_No
REV X01
CHANGE by Erison
20-Nov-2007
SHEET 20 OF 58
http://hobi-elektronika.net

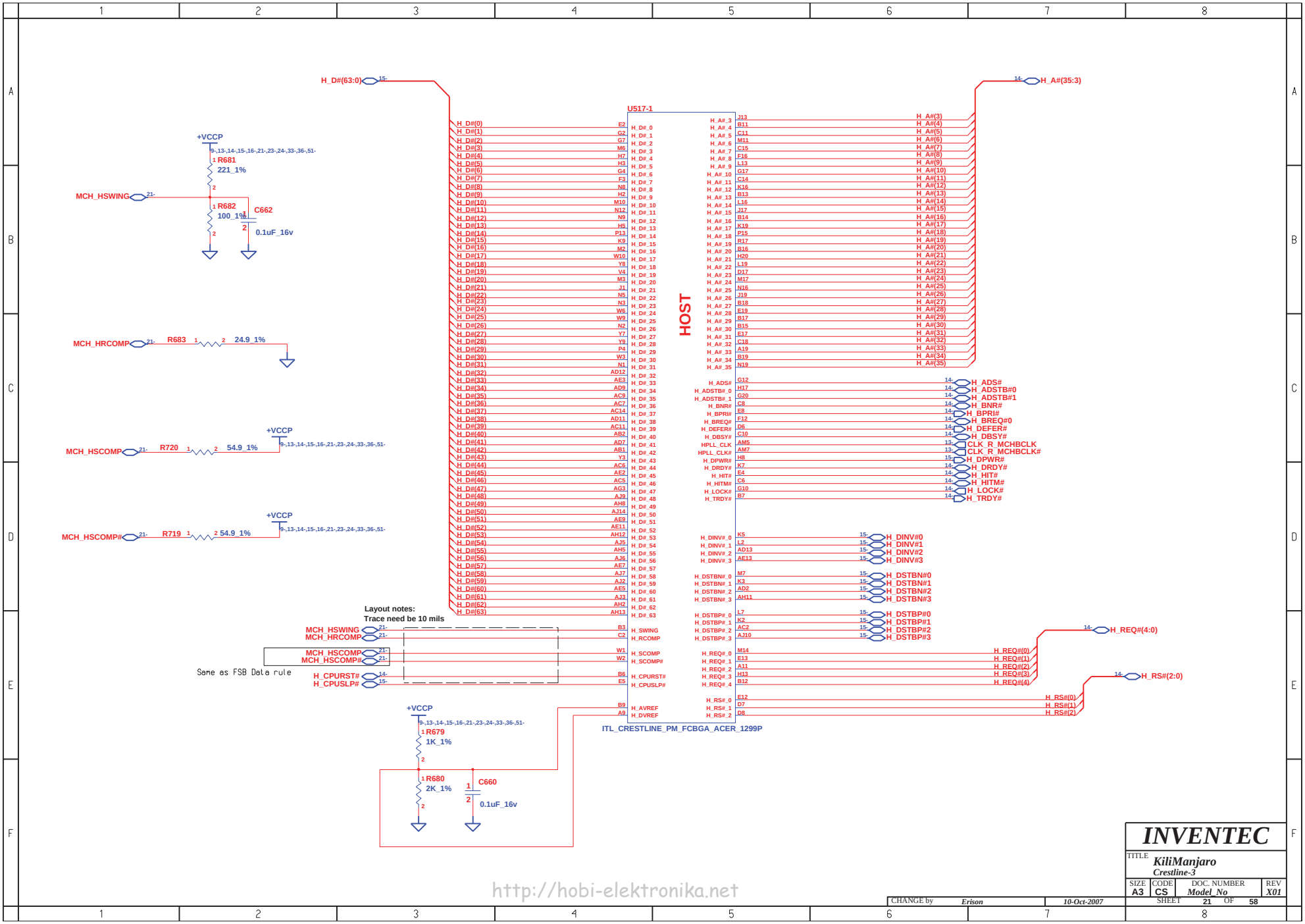

INVENTEC

TITLE KiliManjaro
Crestline-3

SIZE	CODE	DOC. NUMBER	REV
A3	CS	Model_No	X01

SHEET 21 OF 58

CHANGE by Erison 10-Oct-2007

http://hobi-elektronika.net

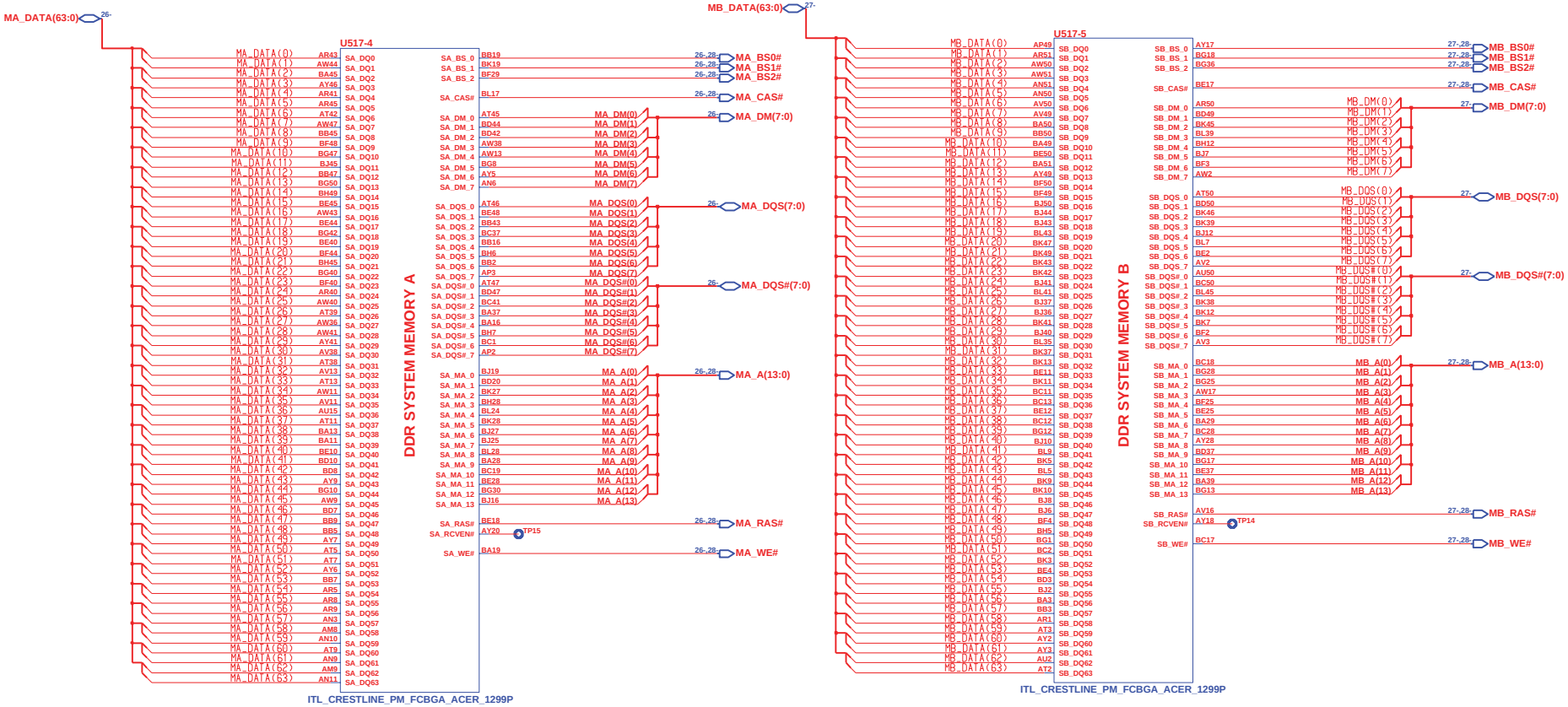

http://hobi-elektronika.net

INVENTEC			
TITLE KiliManjaro Crestline-4			
SIZE A3	CODE CS	DOC. NUMBER Model_No	REV X01
CHANGE by Erison	2-Oct-2007	SHEET 22 OF 58	

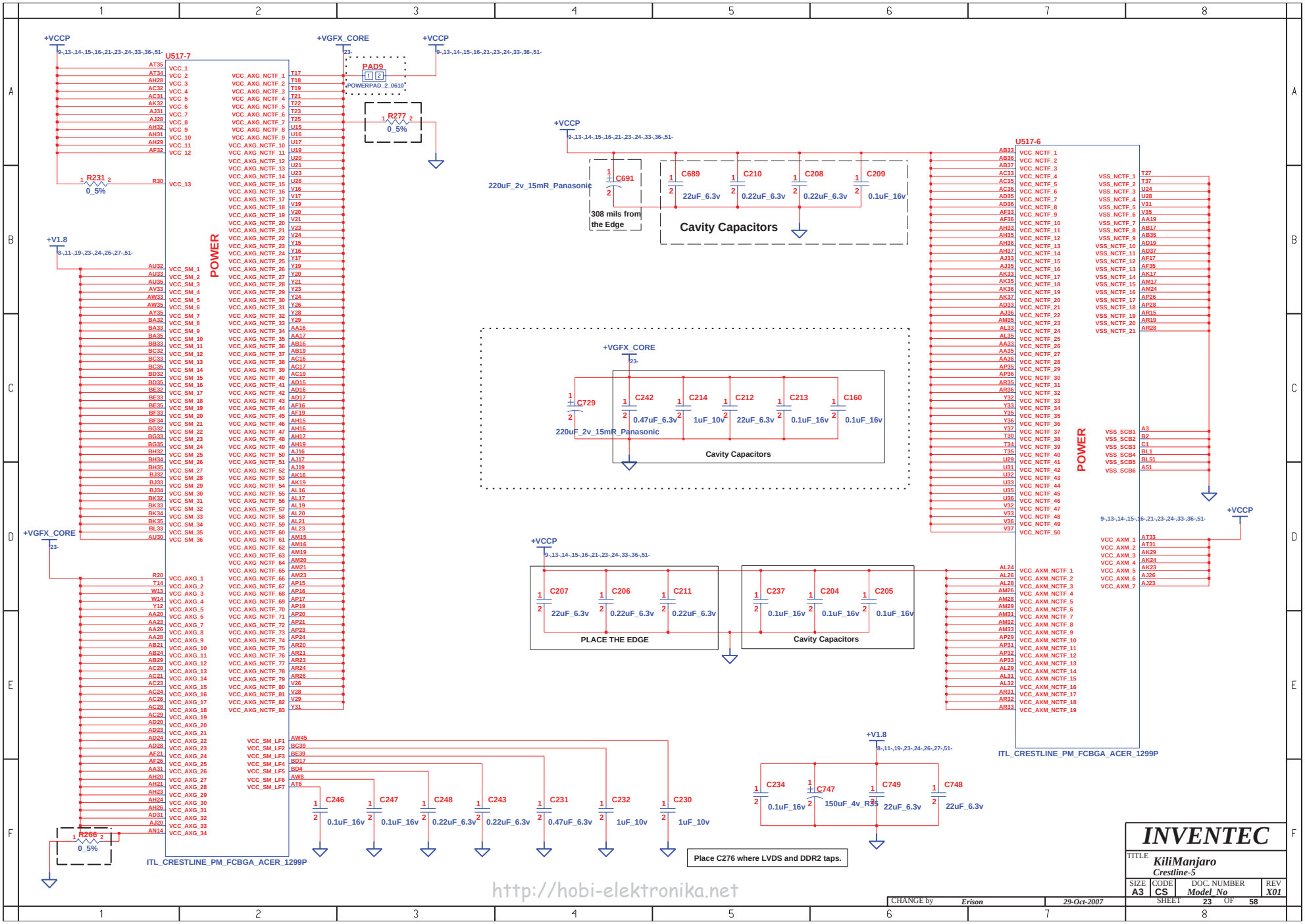

http://hobi-elektronika.net

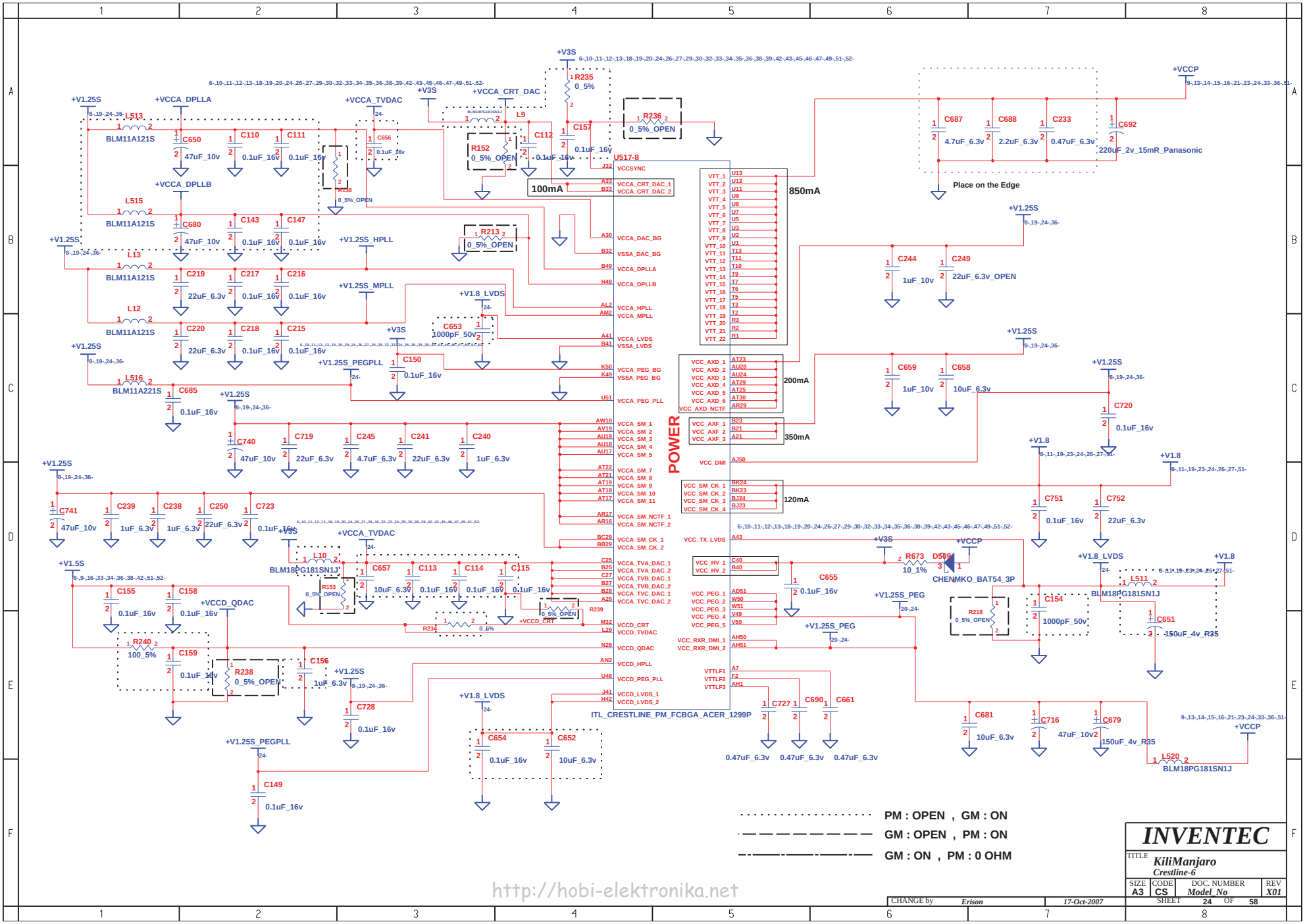

http://hobi-elektronika.net

INVENTEC

TITLE KiliManjaro
Crestline-6

SIZE	CODE	DOC. NUMBER	REV
A3	CS	Model_No	X01

CHANGE by Erison 17-Oct-2007

SHEET 24 OF 58

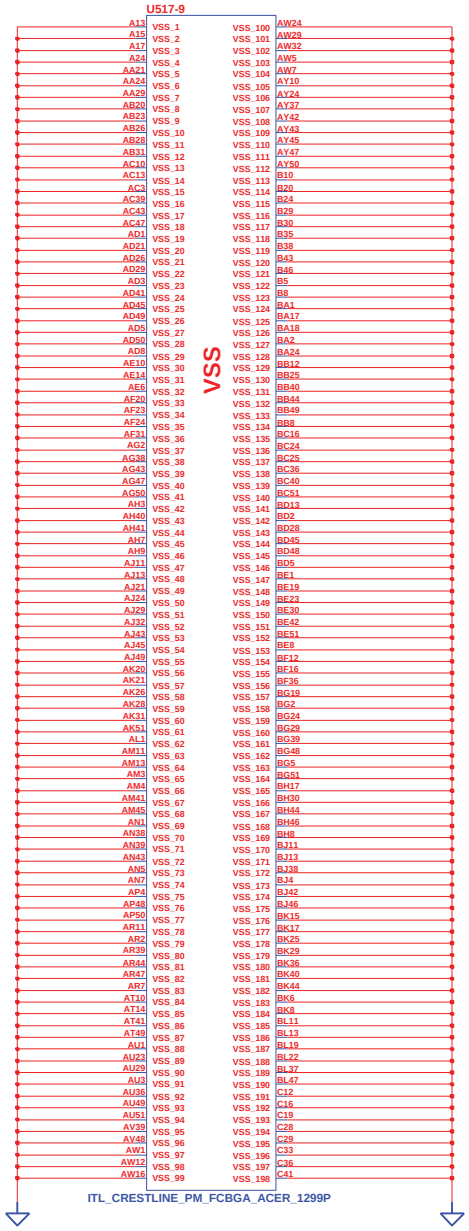

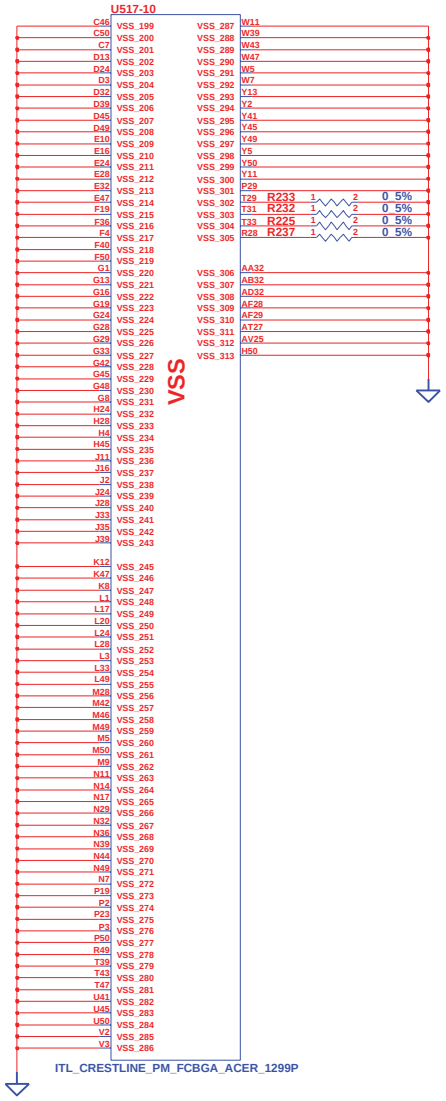

http://hobi-elektronika.net

INVENTEC			
TITLE KiliManjaro Crestline-7			
SIZE A3	CODE CS	DOC. NUMBER Model_No	REV X01
CHANGE by Erison	16-Oct-2007	SHEET 25 OF 58	

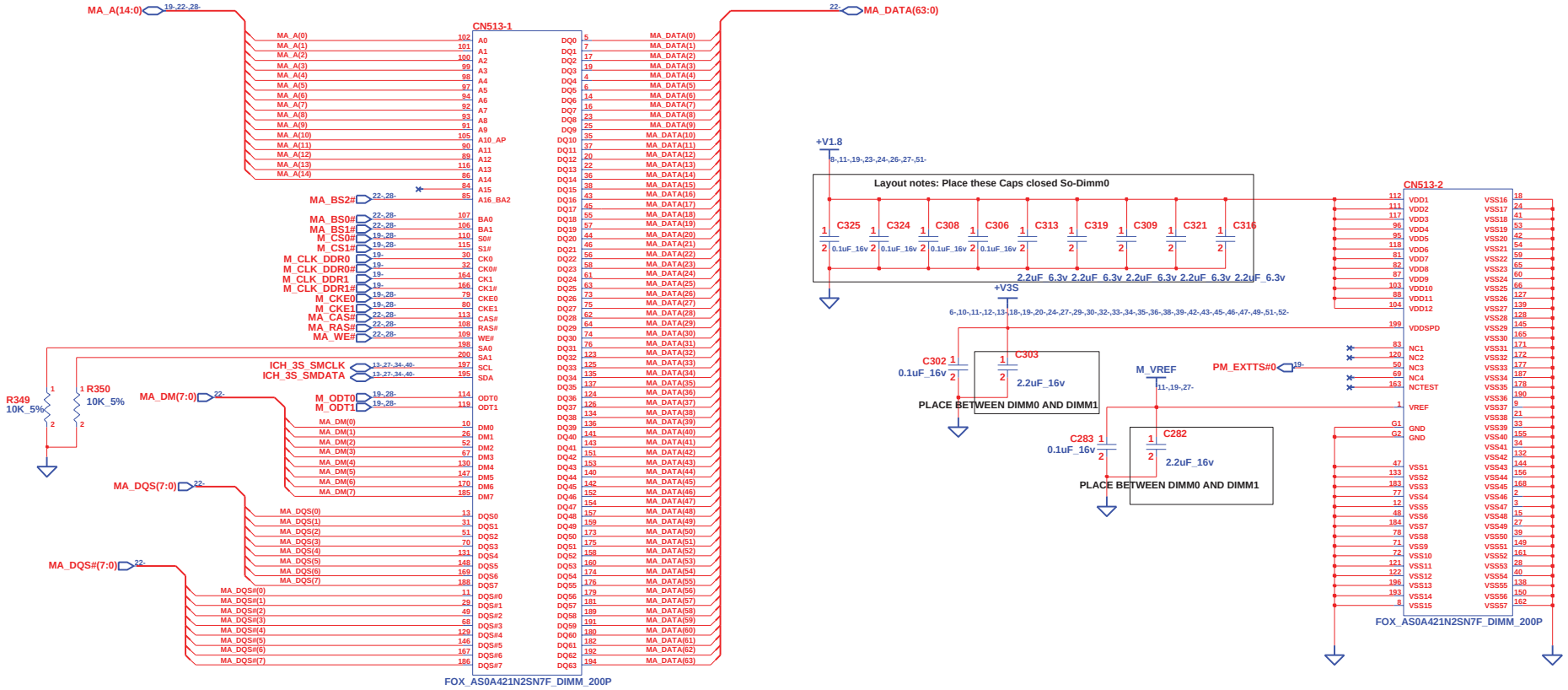

DDR2 SODIMM0

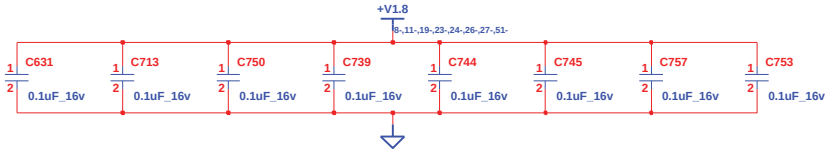

http://hobi-elektronika.net

INVENTEC			
TITLE KiliManjaro DDR2-DIMM-0			
SIZE A3	CODE CS	DOC. NUMBER Model_No	REV X01
CHANGE by Erison	4-Dec-2007	SHEET 26 OF 58	

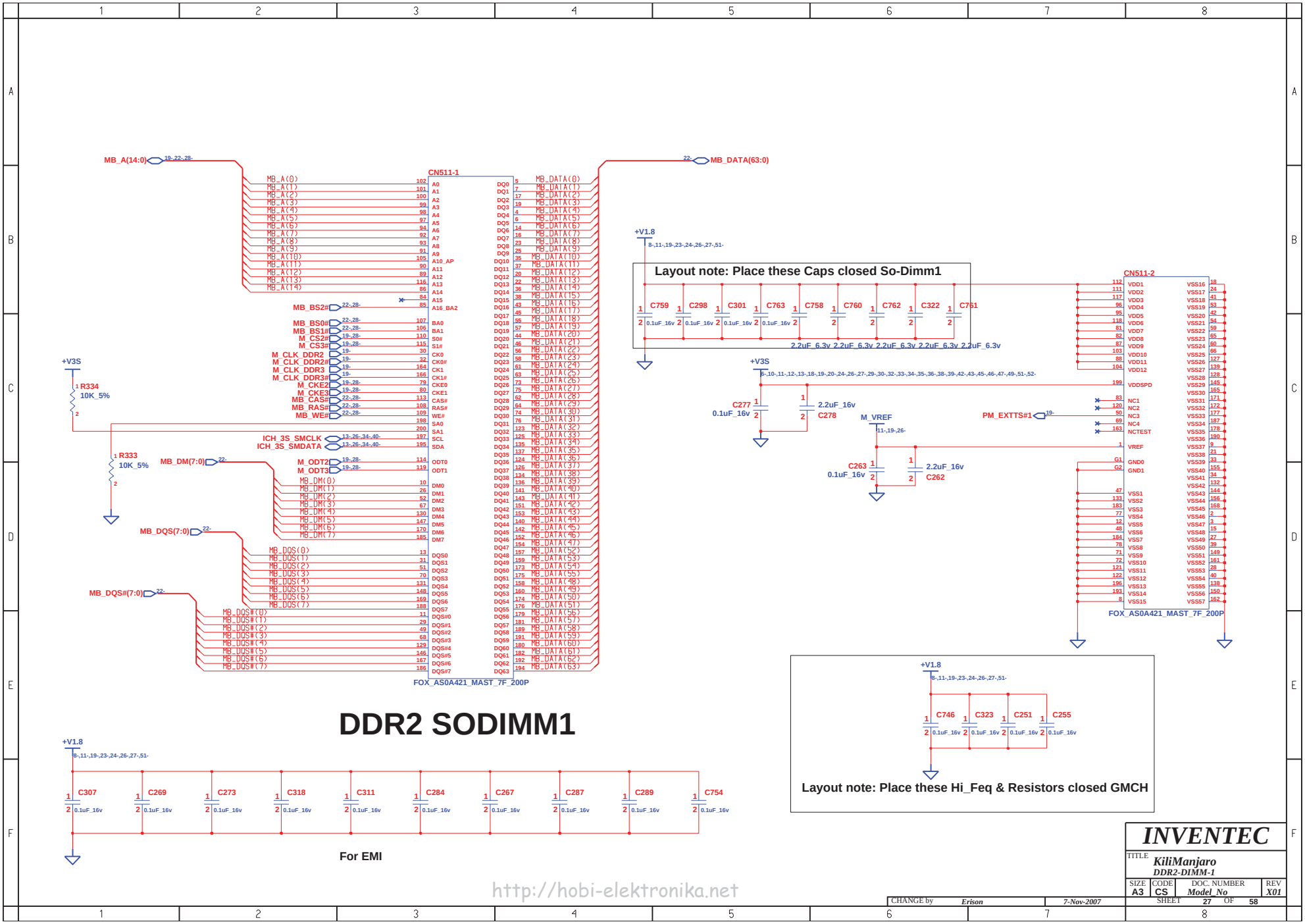
MB_A(14:0)
MB_DATA(63:0)
CN511-1
FOX_AS0A421_MAST_7F_200P
MB_BS2#
MB_BS0#
MB_BS1#
M_CS2#
M_CS3#
M_CLK_DDR2
M_CLK_DDR2#
M_CLK_DDR3
M_CLK_DDR3#
M_CKE2
M_CKE3
MB_CAS#
MB_RAS#
MB_WE#
ICH_3S_SMCLK
ICH_3S_SMDATA
M_ODT2
M_ODT3
MB_DM(7:0)
MB_DQS(7:0)
MB_DQS#(7:0)
+V3S
R334
10K_5%
R333
10K_5%
+V1.8
Layout note: Place these Caps closed So-Dimm1
C759
C298
C301
C763
C758
C760
C762
C322
C751
0.1uF_16v
2.2uF_6.3v
CN511-2
FOX_AS0A421_MAST_7F_200P
PM_EXTTS#1
M_VREF
C277
0.1uF_16v
C278
2.2uF_16v
C263
0.1uF_16v
C262
2.2uF_16v
C746
C323
C251
C255
Layout note: Place these Hi_Feq & Resistors closed GMCH
C307
C269
C273
C318
C311
C284
C267
C287
C289
C754
For EMI
DDR2 SODIMM1
http://hobi-elektronika.net
INVENTEC
TITLE
KiliManjaro
DDR2-DIMM-1
SIZE A3
CODE CS
DOC. NUMBER Model_No
REV X01
CHANGE by Erison
7-Nov-2007
SHEET 27 OF 58

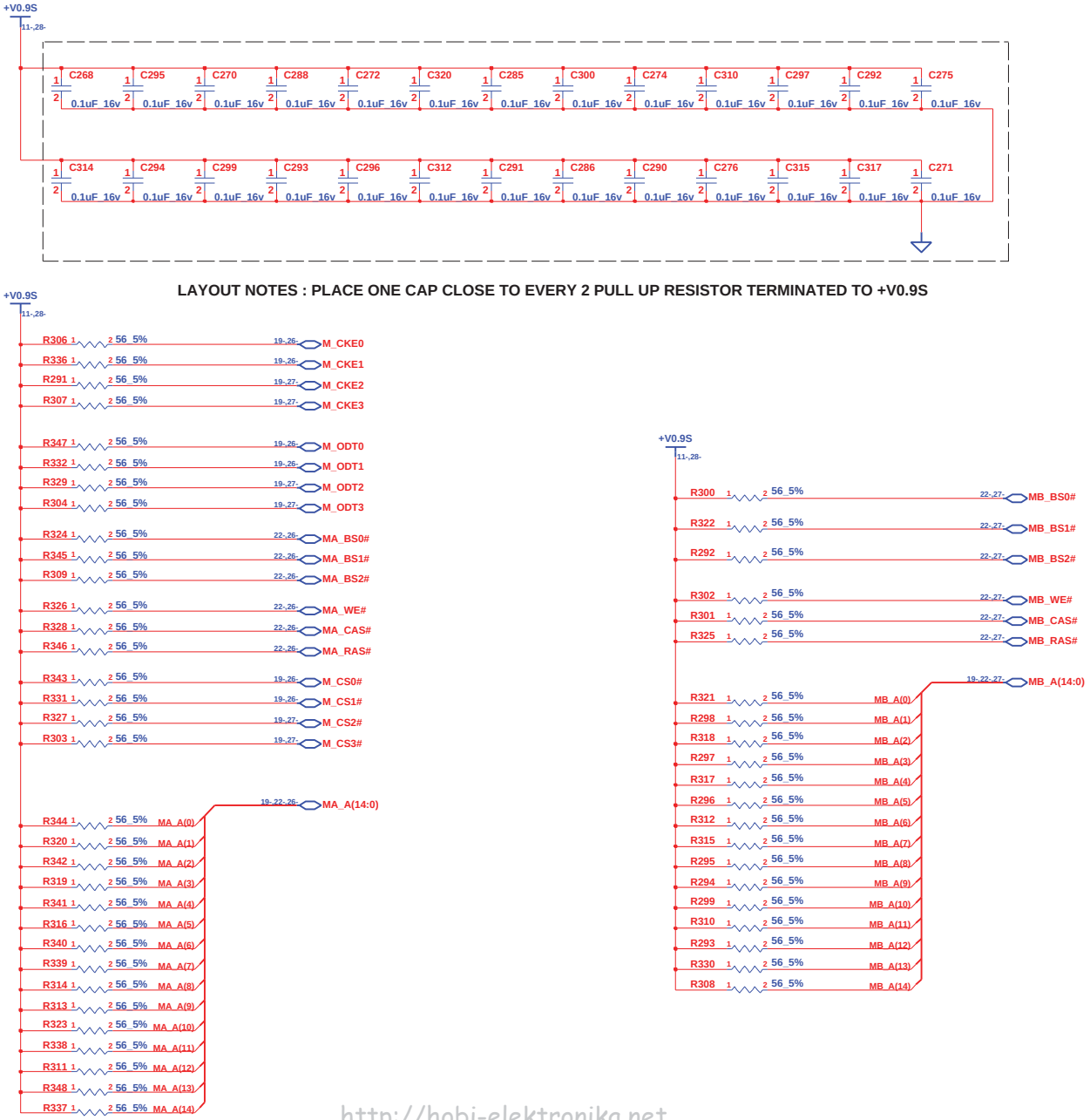

http://hobi-elektronika.net

CHANGE by	Erison	4-Oct-2007	

INVENTEC

TITLE: *KiliManjaro* — *DDR2-DAMPING*

SIZE	CODE	DOC. NUMBER	REV
A3	CS	Model_No	X01

SHEET 28 OF 58

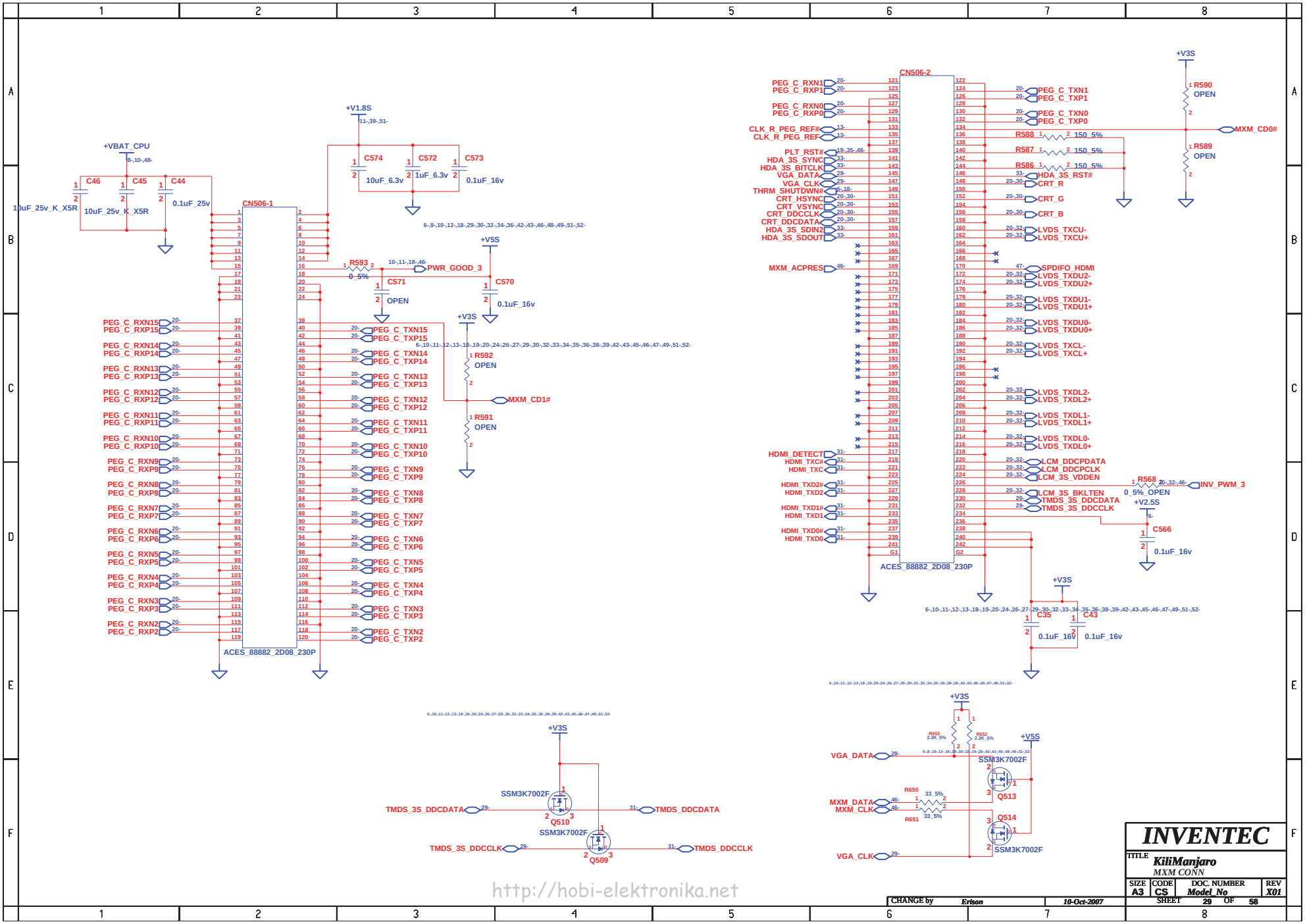
CN506-1
ACES_88882_2D08_230P
CN506-2
ACES_88882_2D08_230P
+VBAT_CPU
+V1.8S
+V5S
+V3S
+V2.5S
C46
C45
C44
10uF_25v_K_X5R
10uF_25v_K_X5R
0.1uF_25v
C574
C572
C573
10uF_6.3v
1uF_6.3v
0.1uF_16v
R593
0_5%
PWR_GOOD_3
C571
OPEN
C570
0.1uF_16v
R592
OPEN
R591
OPEN
MXM_CD1#
R590
OPEN
R589
OPEN
MXM_CD0#
R588
150_5%
R587
150_5%
R586
150_5%
R568
0_5%_OPEN
INV_PWM_3
C566
0.1uF_16v
C35
0.1uF_16v
C43
0.1uF_16v
PEG_C_RXN1
PEG_C_RXP1
PEG_C_RXN0
PEG_C_RXP0
CLK_R_PEG_REF#
CLK_R_PEG_REF
PLT_RST#
HDA_3S_SYNC
HDA_3S_BITCLK
VGA_DATA
VGA_CLK
THRM_SHUTDWN#
CRT_HSYNC
CRT_VSYNC
CRT_DDCCLK
CRT_DDCDATA
HDA_3S_SDIN2
HDA_3S_SDOUT
MXM_ACPRES
HDMI_DETECT
HDMI_TXC#
HDMI_TXC
HDMI_TXD2#
HDMI_TXD2
HDMI_TXD1#
HDMI_TXD1
HDMI_TXD0#
HDMI_TXD0
PEG_C_TXN1
PEG_C_TXP1
PEG_C_TXN0
PEG_C_TXP0
HDA_3S_RST#
CRT_R
CRT_G
CRT_B
LVDS_TXCU-
LVDS_TXCU+
SPDIFO_HDMI
LVDS_TXDU2-
LVDS_TXDU2+
LVDS_TXDU1-
LVDS_TXDU1+
LVDS_TXDU0-
LVDS_TXDU0+
LVDS_TXCL-
LVDS_TXCL+
LVDS_TXDL2-
LVDS_TXDL2+
LVDS_TXDL1-
LVDS_TXDL1+
LVDS_TXDL0-
LVDS_TXDL0+
LCM_DDCPDATA
LCM_DDCPCLK
LCM_3S_VDDEN
LCM_3S_BKLTEN
TMDS_3S_DDCDATA
TMDS_3S_DDCCLK
PEG_C_TXN15
PEG_C_TXP15
PEG_C_TXN14
PEG_C_TXP14
PEG_C_TXN13
PEG_C_TXP13
PEG_C_TXN12
PEG_C_TXP12
PEG_C_TXN11
PEG_C_TXP11
PEG_C_TXN10
PEG_C_TXP10
PEG_C_TXN9
PEG_C_TXP9
PEG_C_TXN8
PEG_C_TXP8
PEG_C_TXN7
PEG_C_TXP7
PEG_C_TXN6
PEG_C_TXP6
PEG_C_TXN5
PEG_C_TXP5
PEG_C_TXN4
PEG_C_TXP4
PEG_C_TXN3
PEG_C_TXP3
PEG_C_TXN2
PEG_C_TXP2
PEG_C_RXN15
PEG_C_RXP15
PEG_C_RXN14
PEG_C_RXP14
PEG_C_RXN13
PEG_C_RXP13
PEG_C_RXN12
PEG_C_RXP12
PEG_C_RXN11
PEG_C_RXP11
PEG_C_RXN10
PEG_C_RXP10
PEG_C_RXN9
PEG_C_RXP9
PEG_C_RXN8
PEG_C_RXP8
PEG_C_RXN7
PEG_C_RXP7
PEG_C_RXN6
PEG_C_RXP6
PEG_C_RXN5
PEG_C_RXP5
PEG_C_RXN4
PEG_C_RXP4
PEG_C_RXN3
PEG_C_RXP3
PEG_C_RXN2
PEG_C_RXP2
SSM3K7002F
Q510
Q509
Q513
Q514
TMDS_3S_DDCDATA
TMDS_3S_DDCCLK
TMDS_DDCDATA
TMDS_DDCCLK
VGA_DATA
VGA_CLK
MXM_DATA
MXM_CLK
R653
2.2K_5%
R652
2.2K_5%
R650
33_5%
R651
33_5%
INVENTEC
TITLE
KiliManjaro
MXM CONN
SIZE
A3
CODE
CS
DOC. NUMBER
Model_No
REV
X01
SHEET
29
OF
58
CHANGE by
Erison
10-Oct-2007
http://hobi-elektronika.net

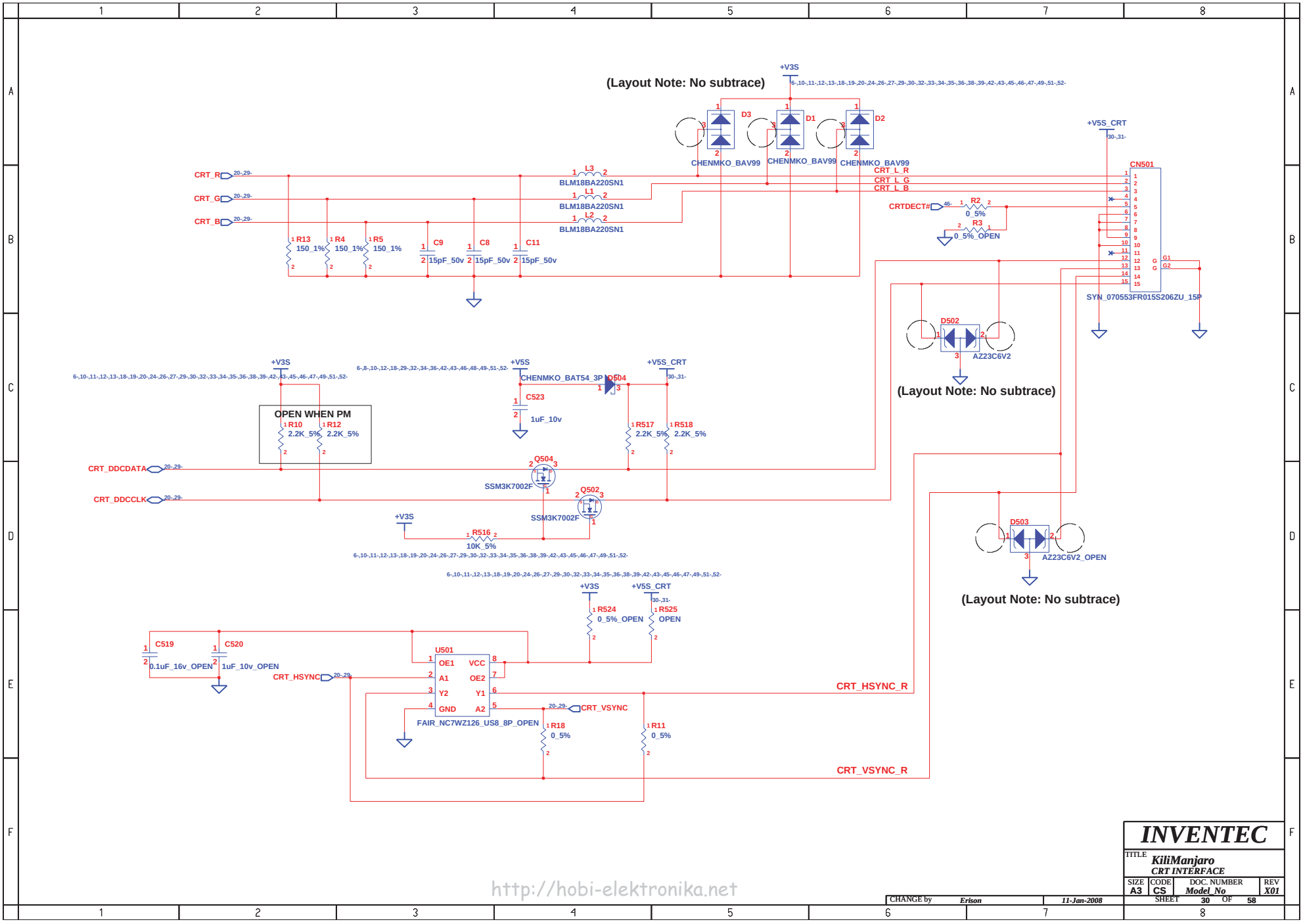
(Layout Note: No subtrace)
+V3S
D3
D1
D2
CHENMKO_BAV99
CRT_R
CRT_G
CRT_B
L3
L1
L2
BLM18BA220SN1
R13
R4
R5
150_1%
C9
C8
C11
15pF_50v
CRT_L_R
CRT_L_G
CRT_L_B
+V5S_CRT
CN501
CRTDECT#
R2
0_5%
R3
0_5%_OPEN
SYN_070553FR015S206ZU_15P
D502
AZ23C6V2
(Layout Note: No subtrace)
+V5S
CHENMKO_BAT54_3P
D504
C523
1uF_10v
OPEN WHEN PM
R10
R12
2.2K_5%
R517
R518
CRT_DDCDATA
CRT_DDCCLK
Q504
Q502
SSM3K7002F
R516
10K_5%
D503
AZ23C6V2_OPEN
(Layout Note: No subtrace)
R524
0_5%_OPEN
R525
OPEN
C519
C520
0.1uF_16v_OPEN
1uF_10v_OPEN
CRT_HSYNC
U501
OE1
A1
Y2
GND
VCC
OE2
Y1
A2
FAIR_NC7WZ126_US8_8P_OPEN
CRT_VSYNC
R18
R11
0_5%
CRT_HSYNC_R
CRT_VSYNC_R
http://hobi-elektronika.net
INVENTEC
TITLE
KiliManjaro
CRT INTERFACE
SIZE A3
CODE CS
DOC. NUMBER Model_No
REV X01
CHANGE by Erison
11-Jan-2008
SHEET 30 OF 58

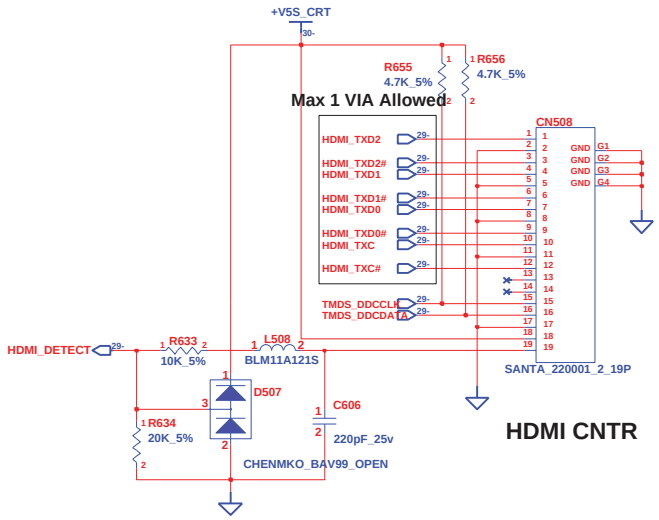

http://hobi-elektronika.net

CHANGE by	Erison	5-Dec-2007	

INVENTEC

TITLE *KiliManjaro HDMI*

SIZE	CODE	DOC. NUMBER	REV
A3	CS	Model_No	X01

SHEET 31 OF 58

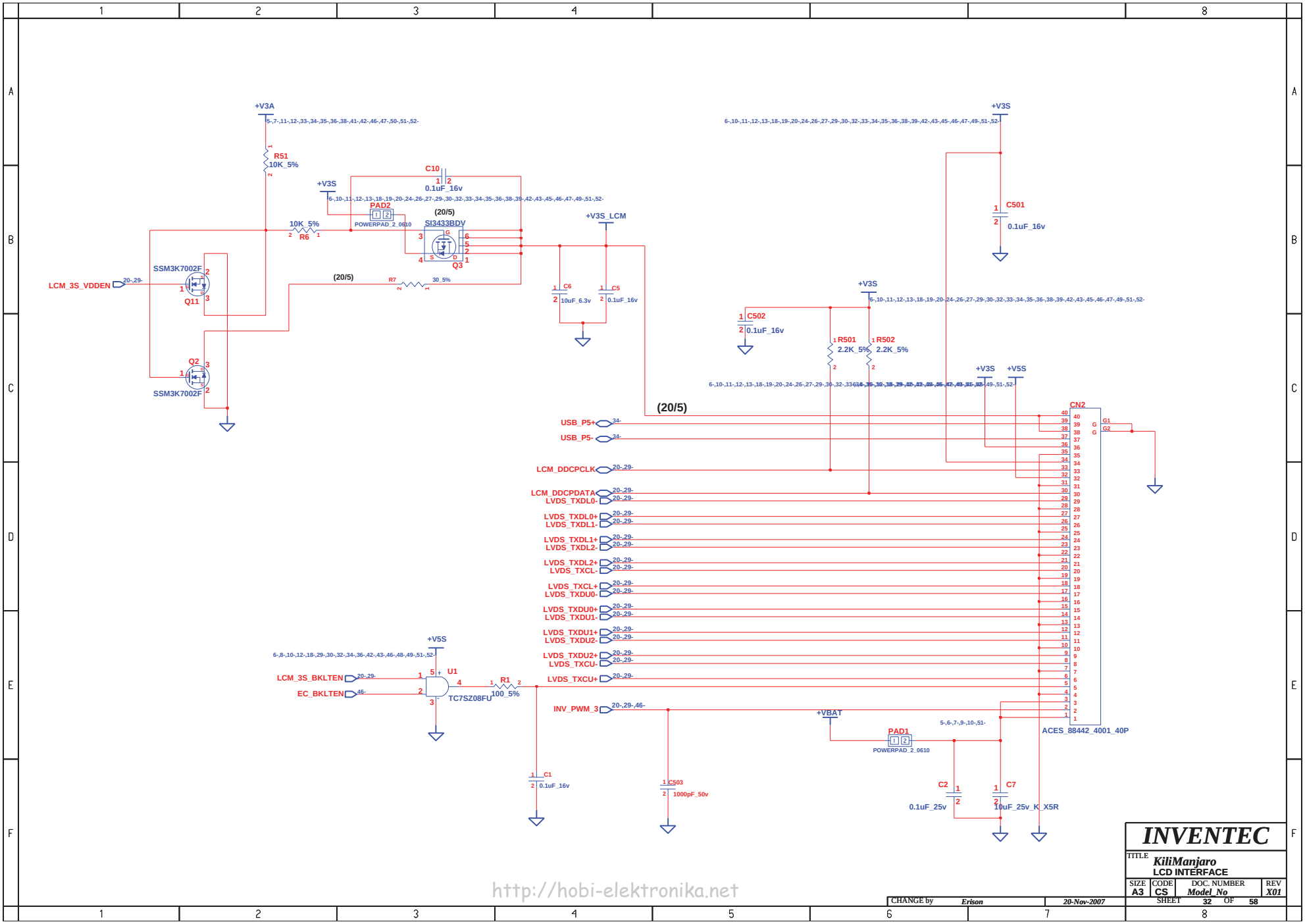
+V3A
R51
10K_5%
C10
0.1uF_16v
+V3S
PAD2
POWERPAD_2_0610
(20/5)
SI3433BDV
Q3
10K_5%
R6
+V3S_LCM
SSM3K7002F
Q11
LCM_3S_VDDEN
(20/5)
R7
30_5%
C6
10uF_6.3v
C5
0.1uF_16v
Q2
SSM3K7002F
C501
0.1uF_16v
C502
0.1uF_16v
R501
2.2K_5%
R502
2.2K_5%
+V5S
CN2
USB_P5+
USB_P5-
LCM_DDCPCLK
LCM_DDCPDATA
LVDS_TXDL0-
LVDS_TXDL0+
LVDS_TXDL1-
LVDS_TXDL1+
LVDS_TXDL2-
LVDS_TXDL2+
LVDS_TXCL-
LVDS_TXCL+
LVDS_TXDU0-
LVDS_TXDU0+
LVDS_TXDU1-
LVDS_TXDU1+
LVDS_TXDU2-
LVDS_TXDU2+
LVDS_TXCU-
LVDS_TXCU+
LCM_3S_BKLTEN
EC_BKLTEN
U1
TC7SZ08FU
R1
100_5%
INV_PWM_3
+VBAT
PAD1
POWERPAD_2_0610
C1
0.1uF_16v
C503
1000pF_50v
C2
0.1uF_25v
C7
10uF_25v_K_X5R
ACES_88442_4001_40P
INVENTEC
TITLE
KiliManjaro
LCD INTERFACE
SIZE A3
CODE CS
DOC. NUMBER Model_No
REV X01
CHANGE by Erison
20-Nov-2007
SHEET 32 OF 58
http://hobi-elektronika.net

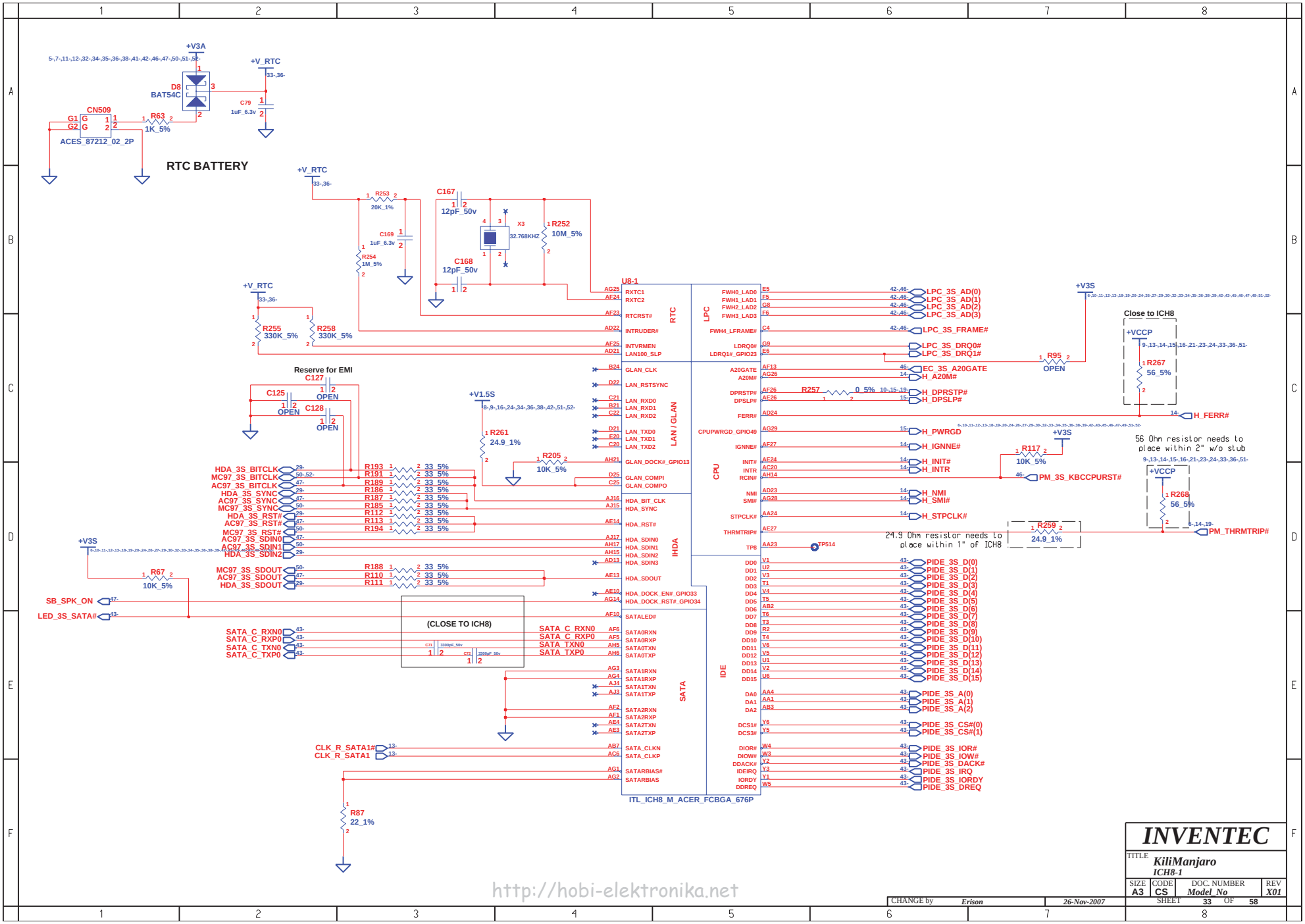
RTC BATTERY
+V3A
D8
BAT54C
CN509
ACES_87212_02_2P
R63
1K_5%
+V_RTC
C79
1uF_6.3v
R253
20K_1%
C169
1uF_6.3v
R254
1M_5%
C167
12pF_50v
C168
12pF_50v
X3
32.768KHZ
R252
10M_5%
R255
330K_5%
R258
330K_5%
U8-1
ITL_ICH8_M_ACER_FCBGA_676P
RTC
LAN / GLAN
IHDA
SATA
LPC
CPU
IDE
Reserve for EMI
C127
OPEN
C125
OPEN
C128
OPEN
+V1.5S
R261
24.9_1%
R205
10K_5%
R257
0_5%
R95
OPEN
+V3S
Close to ICH8
+VCCP
R267
56_5%
R268
56_5%
56 Ohm resistor needs to place within 2" w/o stub
R117
10K_5%
R259
24.9_1%
24.9 Ohm resistor needs to place within 1" of ICH8
R67
10K_5%
(CLOSE TO ICH8)
C171
3300pF_50v
C172
3300pF_50v
R87
22_1%
LPC_3S_AD(0)
LPC_3S_AD(1)
LPC_3S_AD(2)
LPC_3S_AD(3)
LPC_3S_FRAME#
LPC_3S_DRQ0#
LPC_3S_DRQ1#
EC_3S_A20GATE
H_A20M#
H_DPRSTP#
H_DPSLP#
H_FERR#
H_PWRGD
H_IGNNE#
H_INIT#
H_INTR
PM_3S_KBCCPURST#
H_NMI
H_SMI#
H_STPCLK#
PM_THRMTRIP#
PIDE_3S_D(0)
PIDE_3S_D(1)
PIDE_3S_D(2)
PIDE_3S_D(3)
PIDE_3S_D(4)
PIDE_3S_D(5)
PIDE_3S_D(6)
PIDE_3S_D(7)
PIDE_3S_D(8)
PIDE_3S_D(9)
PIDE_3S_D(10)
PIDE_3S_D(11)
PIDE_3S_D(12)
PIDE_3S_D(13)
PIDE_3S_D(14)
PIDE_3S_D(15)
PIDE_3S_A(0)
PIDE_3S_A(1)
PIDE_3S_A(2)
PIDE_3S_CS#(0)
PIDE_3S_CS#(1)
PIDE_3S_IOR#
PIDE_3S_IOW#
PIDE_3S_DACK#
PIDE_3S_IRQ
PIDE_3S_IORDY
PIDE_3S_DREQ
HDA_3S_BITCLK
MC97_3S_BITCLK
AC97_3S_BITCLK
HDA_3S_SYNC
AC97_3S_SYNC
MC97_3S_SYNC
HDA_3S_RST#
AC97_3S_RST#
MC97_3S_RST#
AC97_3S_SDIN0
AC97_3S_SDIN1
HDA_3S_SDIN2
MC97_3S_SDOUT
AC97_3S_SDOUT
HDA_3S_SDOUT
SB_SPK_ON
LED_3S_SATA#
SATA_C_RXN0
SATA_C_RXP0
SATA_C_TXN0
SATA_C_TXP0
CLK_R_SATA1#
CLK_R_SATA1
INVENTEC
TITLE
KiliManjaro
ICH8-1
SIZE A3
CODE CS
DOC. NUMBER Model_No
REV X01
CHANGE by Erison
26-Nov-2007
SHEET 33 OF 58
http://hobi-elektronika.net

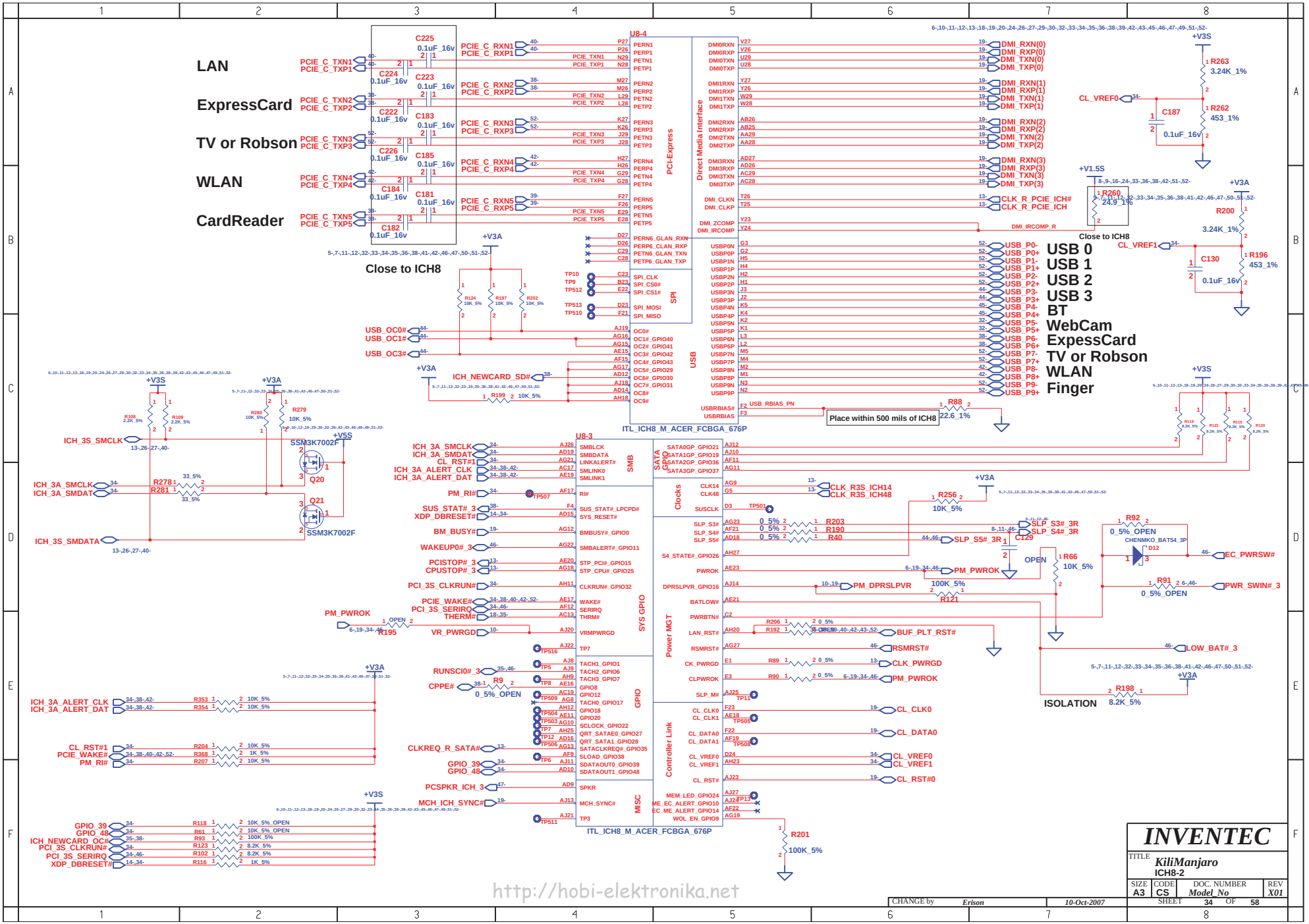
LAN
ExpressCard
TV or Robson
WLAN
CardReader
Close to ICH8
U8-4
PCI-Express
Direct Media Interface
SPI
USB
ITL_ICH8_M_ACER_FCBGA_676P
USB 0
USB 1
USB 2
USB 3
BT
WebCam
ExpessCard
TV or Robson
WLAN
Finger
Place within 500 mils of ICH8
U8-3
SMB
SATA GPIO
Clocks
SYS GPIO
Power MGT
GPIO
Controller Link
MISC
ISOLATION
INVENTEC
KiliManjaro
ICH8-2
SIZE A3
CODE CS
DOC. NUMBER Model_No
REV X01
SHEET 34 OF 58
CHANGE by Erison
10-Oct-2007
http://hobi-elektronika.net

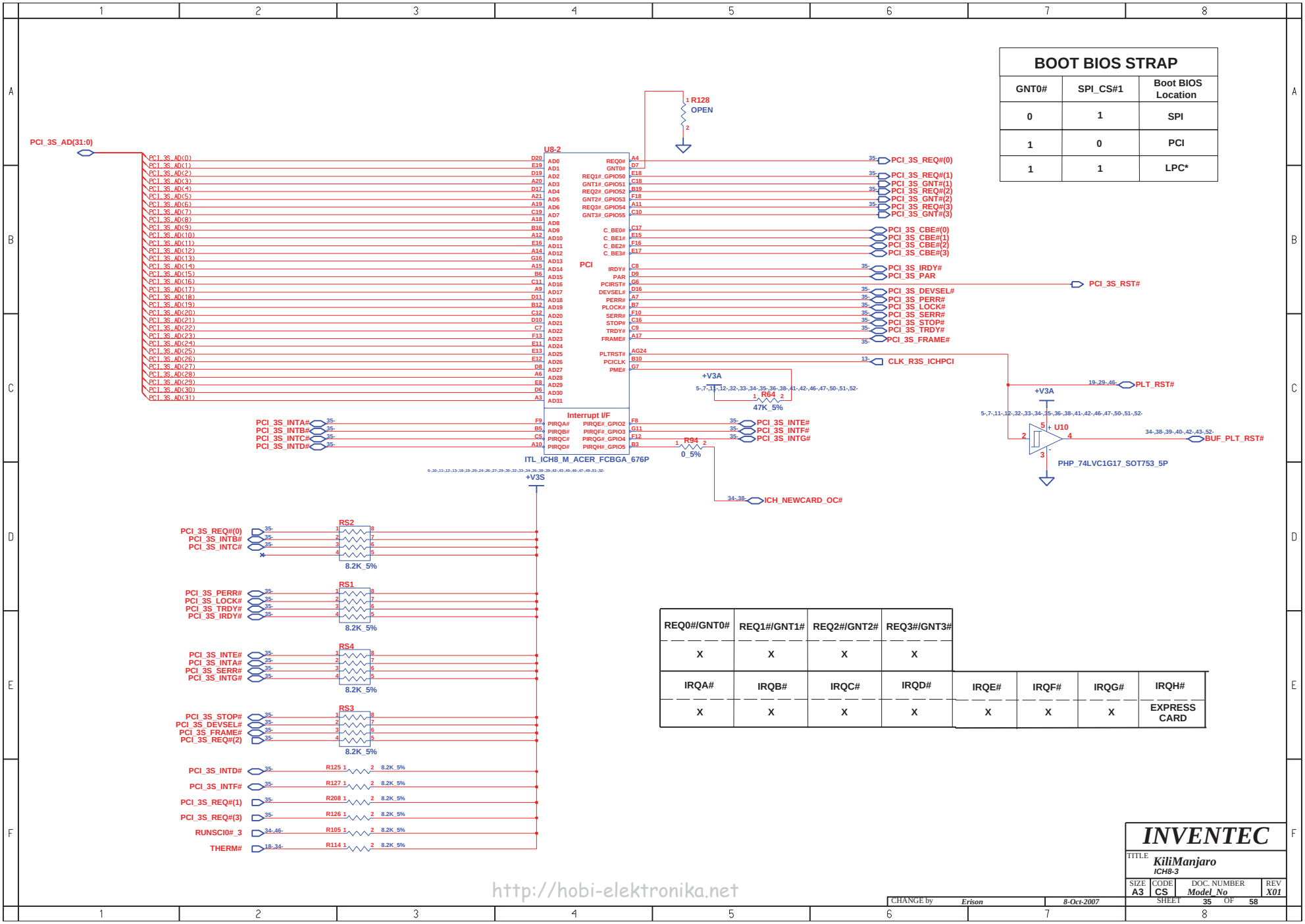

BOOT BIOS STRAP

GNT0#	SPI_CS#1	Boot BIOS Location
0	1	SPI
1	0	PCI
1	1	LPC*

REQ0#/GNT0#	REQ1#/GNT1#	REQ2#/GNT2#	REQ3#/GNT3#
X	X	X	X

IRQA#	IRQB#	IRQC#	IRQD#	IRQE#	IRQF#	IRQG#	IRQH#
X	X	X	X	X	X	X	EXPRESS CARD

http://hobi-elektronika.net

INVENTEC

TITLE KiliManjaro
ICH8-3

SIZE	CODE	DOC. NUMBER	REV
A3	CS	Model_No	X01

CHANGE by Erison 8-Oct-2007

SHEET 35 OF 58

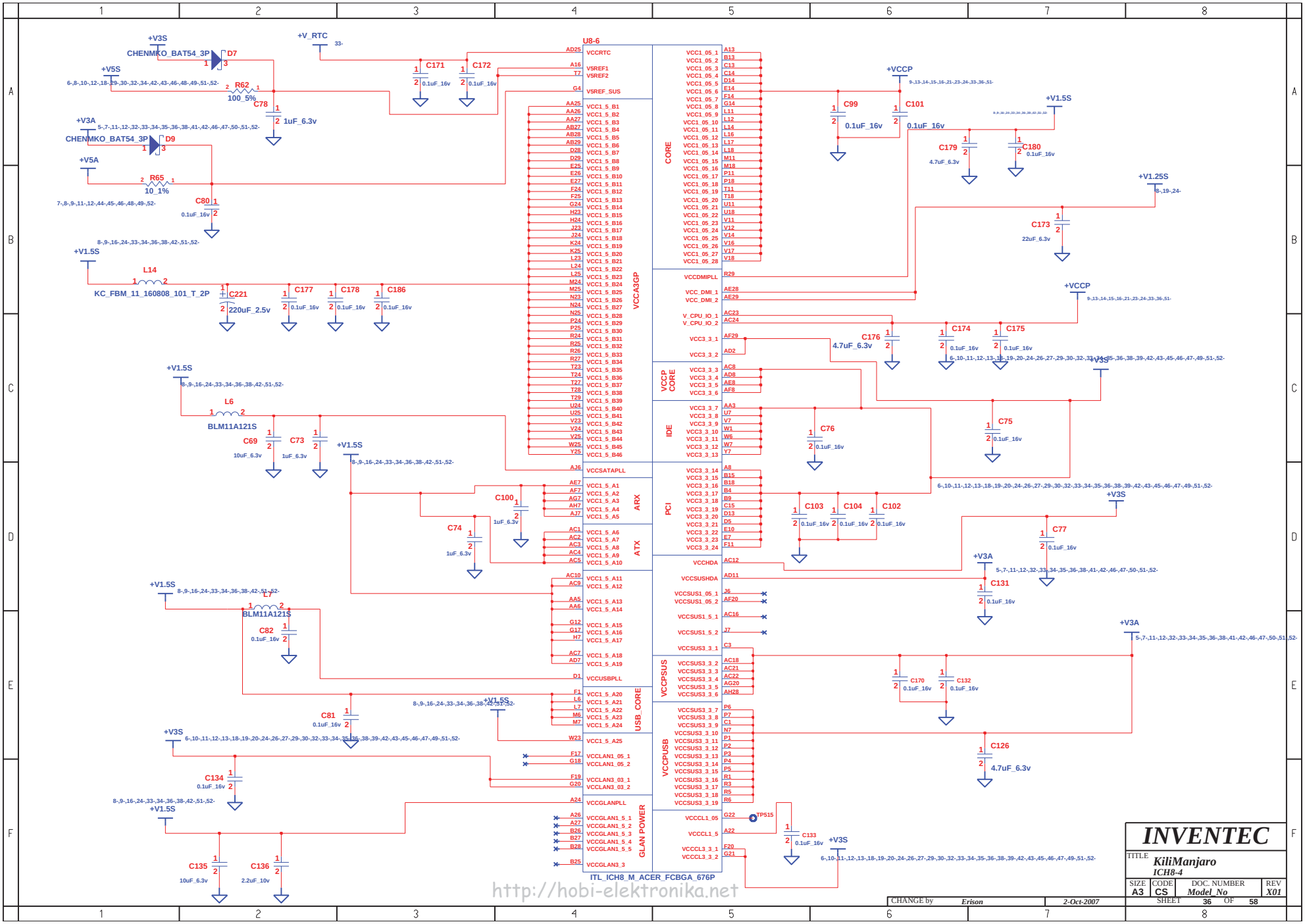
U8-6
ITL_ICH8_M_ACER_FCBGA_676P
CORE
VCCA3GP
VCCP CORE
IDE
PCI
ARX
ATX
USB_CORE
VCCPSUS
VCCPUSB
GLAN POWER
+V3S
CHENMKO_BAT54_3P
D7
D9
+V5S
+V5A
+V3A
+V_RTC
R62
100_5%
R65
10_1%
C78
1uF_6.3v
C80
0.1uF_16v
C171
C172
L14
KC_FBM_11_160808_101_T_2P
C221
220uF_2.5v
C177
C178
C186
+V1.5S
L6
BLM11A121S
L7
C69
10uF_6.3v
C73
1uF_6.3v
C100
C74
C82
C81
C134
C135
C136
2.2uF_10v
+VCCP
C99
C101
C179
4.7uF_6.3v
C180
+V1.25S
C173
22uF_6.3v
C176
4.7uF_6.3v
C174
C175
C76
C75
C103
C104
C102
C77
C131
C170
C132
C126
4.7uF_6.3v
C133
TP515
INVENTEC
TITLE
KiliManjaro
ICH8-4
SIZE A3
CODE CS
DOC. NUMBER Model_No
REV X01
SHEET 36 OF 58
CHANGE by Erison
2-Oct-2007
http://hobi-elektronika.net

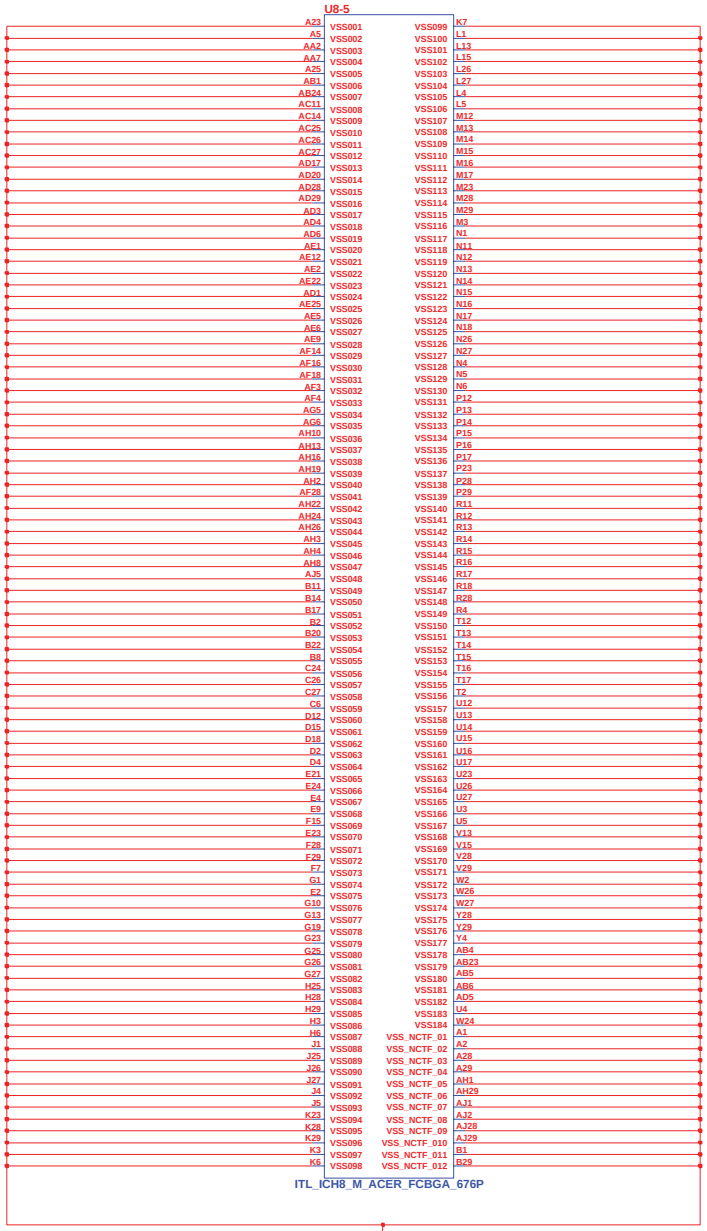

http://hobi-elektronika.net

CHANGE by	Erison	4-Oct-2007	

INVENTEC

TITLE *KiliManjaro*
ICH8-5

SIZE	CODE	DOC. NUMBER	REV
A3	CS	*Model_No*	*X01*

SHEET 37 OF 58

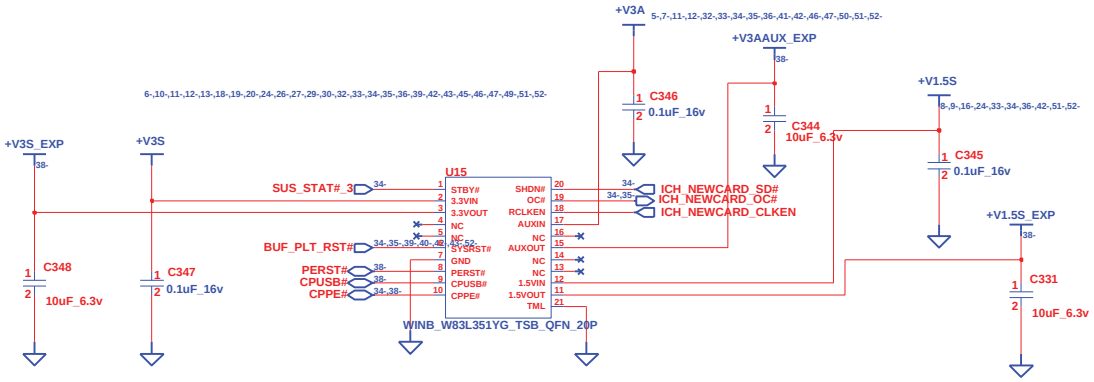

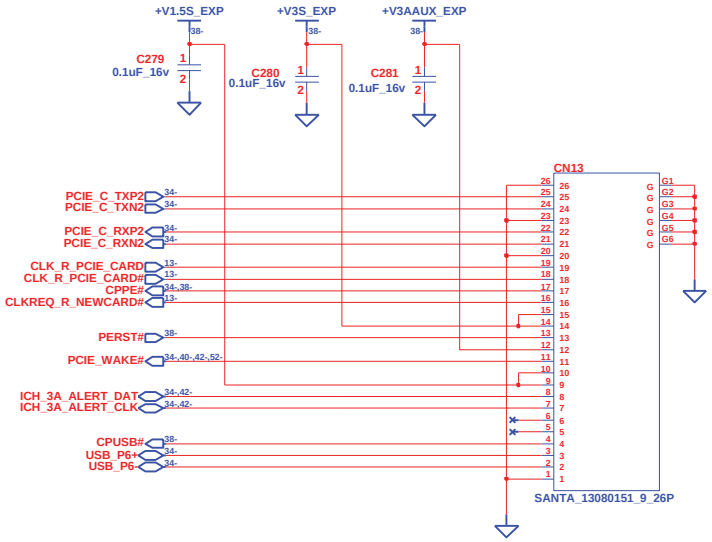

http://hobi-elektronika.net

CHANGE by	Erison	8-Oct-2007	

INVENTEC

TITLE *KiliManjaro EXPRESS CARD*

SIZE	CODE	DOC. NUMBER	REV
A3	CS	Model_No	X01

SHEET 38 OF 58

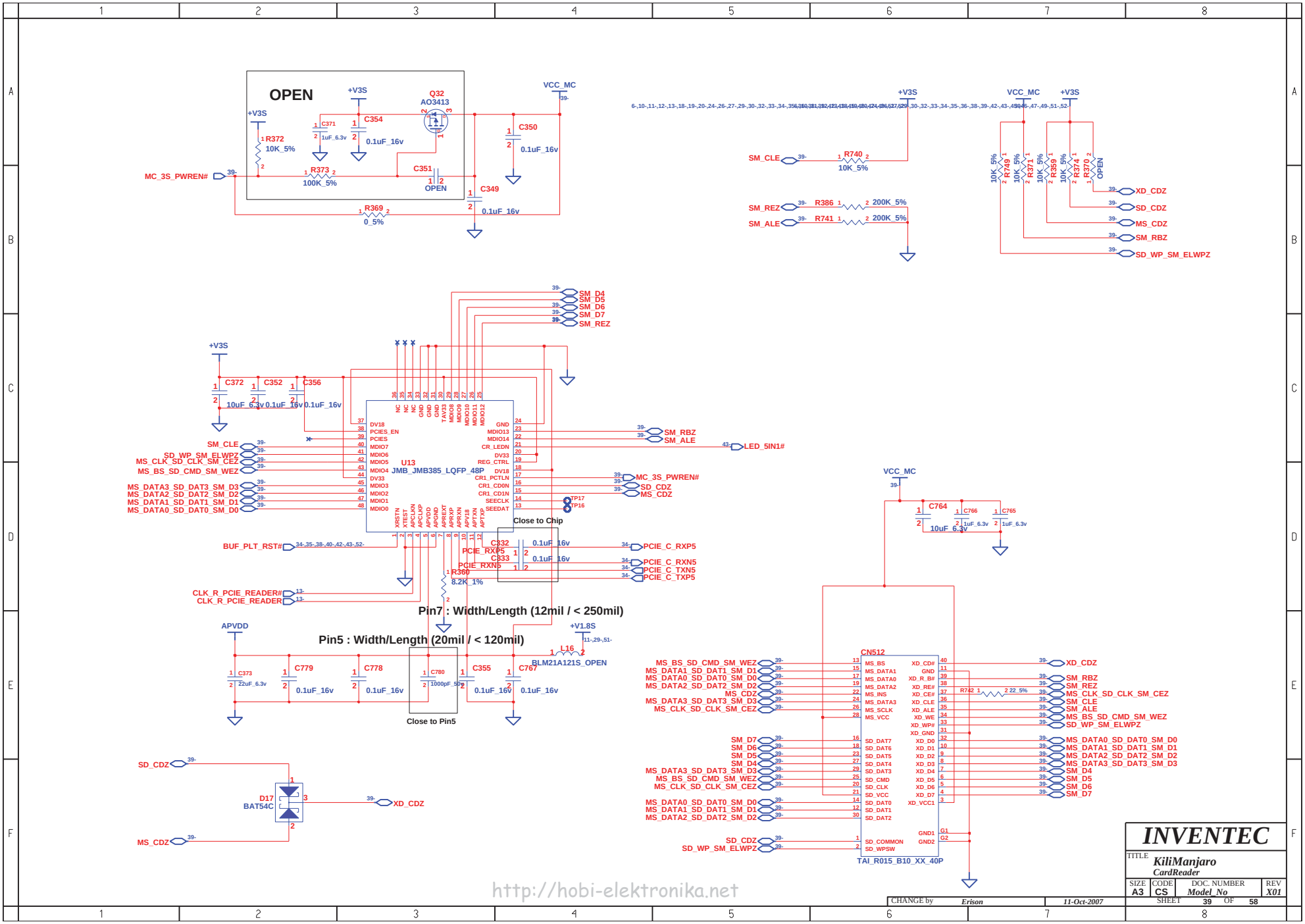
OPEN
+V3S
Q32
AO3413
VCC_MC
C371
1uF_6.3v
C354
0.1uF_16v
C350
0.1uF_16v
R372
10K_5%
MC_3S_PWREN#
R373
100K_5%
C351
OPEN
C349
0.1uF_16v
R369
0_5%
SM_CLE
R740
10K_5%
SM_REZ
R386
200K_5%
SM_ALE
R741
200K_5%
R329
R319
R371
R323
R374
R370
OPEN
XD_CDZ
SD_CDZ
MS_CDZ
SM_RBZ
SD_WP_SM_ELWPZ
SM_D4
SM_D5
SM_D6
SM_D7
SM_REZ
C372
10uF_6.3v
C352
0.1uF_16v
C356
0.1uF_16v
U13
JMB_JMB385_LQFP_48P
SM_RBZ
SM_ALE
LED_5IN1#
MC_3S_PWREN#
SD_CDZ
MS_CDZ
SM_CLE
SD_WP_SM_ELWPZ
MS_CLK_SD_CLK_SM_CEZ
MS_BS_SD_CMD_SM_WEZ
MS_DATA3_SD_DAT3_SM_D3
MS_DATA2_SD_DAT2_SM_D2
MS_DATA1_SD_DAT1_SM_D1
MS_DATA0_SD_DAT0_SM_D0
TP17
TP16
Close to Chip
BUF_PLT_RST#
C332
0.1uF_16v
PCIE_RXP5
C333
0.1uF_16v
PCIE_RXN5
R360
8.2K_1%
PCIE_C_RXP5
PCIE_C_RXN5
PCIE_C_TXN5
PCIE_C_TXP5
CLK_R_PCIE_READER#
CLK_R_PCIE_READER
Pin7 : Width/Length (12mil / < 250mil)
Pin5 : Width/Length (20mil / < 120mil)
APVDD
+V1.8S
L16
BLM21A121S_OPEN
C373
22uF_6.3v
C779
0.1uF_16v
C778
0.1uF_16v
C780
1000pF_50v
C355
0.1uF_16v
C767
0.1uF_16v
Close to Pin5
D17
BAT54C
XD_CDZ
VCC_MC
C764
10uF_6.3v
C766
1uF_6.3v
C765
1uF_6.3v
CN512
TAI_R015_B10_XX_40P
R742
22_5%
MS_BS_SD_CMD_SM_WEZ
MS_DATA1_SD_DAT1_SM_D1
MS_DATA0_SD_DAT0_SM_D0
MS_DATA2_SD_DAT2_SM_D2
MS_CDZ
MS_DATA3_SD_DAT3_SM_D3
MS_CLK_SD_CLK_SM_CEZ
SM_D7
SM_D6
SM_D5
SM_D4
MS_DATA3_SD_DAT3_SM_D3
MS_BS_SD_CMD_SM_WEZ
MS_CLK_SD_CLK_SM_CEZ
MS_DATA0_SD_DAT0_SM_D0
MS_DATA1_SD_DAT1_SM_D1
MS_DATA2_SD_DAT2_SM_D2
SD_CDZ
SD_WP_SM_ELWPZ
XD_CDZ
SM_RBZ
SM_REZ
MS_CLK_SD_CLK_SM_CEZ
SM_CLE
SM_ALE
MS_BS_SD_CMD_SM_WEZ
SD_WP_SM_ELWPZ
MS_DATA0_SD_DAT0_SM_D0
MS_DATA1_SD_DAT1_SM_D1
MS_DATA2_SD_DAT2_SM_D2
MS_DATA3_SD_DAT3_SM_D3
SM_D4
SM_D5
SM_D6
SM_D7
INVENTEC
TITLE
KiliManjaro
CardReader
SIZE A3
CODE CS
DOC. NUMBER Model_No
REV X01
CHANGE by Erison
11-Oct-2007
SHEET 39 OF 58
http://hobi-elektronika.net

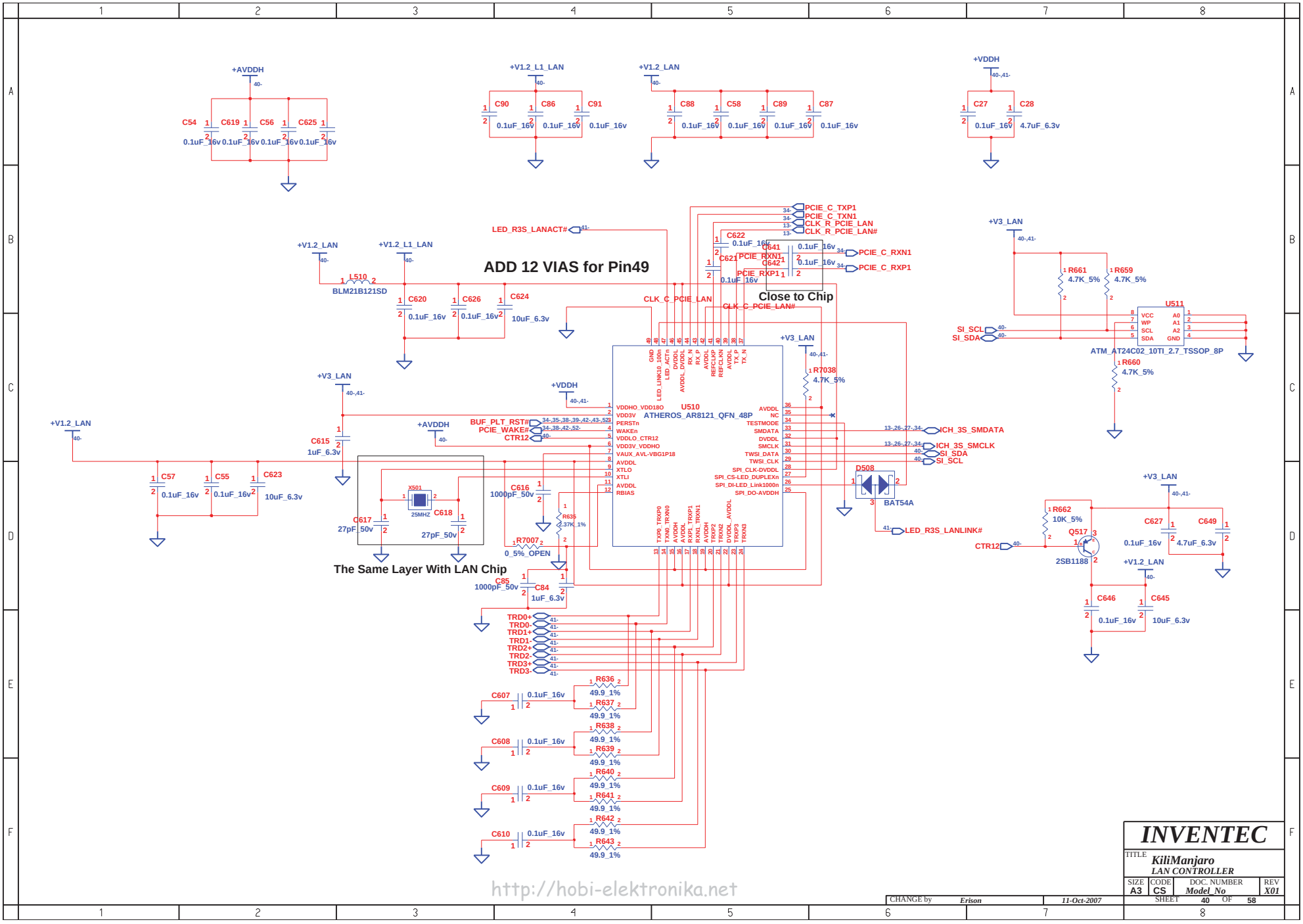
ADD 12 VIAS for Pin49
Close to Chip
The Same Layer With LAN Chip
U510
ATHEROS_AR8121_QFN_48P
U511
ATM_AT24C02_10TI_2.7_TSSOP_8P
L510
BLM21B121SD
D508
BAT54A
Q517
2SB1188
X501
25MHZ
+AVDDH
+V1.2_L1_LAN
+V1.2_LAN
+VDDH
+V3_LAN
PCIE_C_TXP1
PCIE_C_TXN1
CLK_R_PCIE_LAN
CLK_R_PCIE_LAN#
PCIE_C_RXN1
PCIE_C_RXP1
PCIE_RXN1
PCIE_RXP1
CLK_C_PCIE_LAN
CLK_C_PCIE_LAN#
LED_R3S_LANACT#
BUF_PLT_RST#
PCIE_WAKE#
CTR12
ICH_3S_SMDATA
ICH_3S_SMCLK
SI_SDA
SI_SCL
LED_R3S_LANLINK#
TRD0+
TRD0-
TRD1+
TRD1-
TRD2+
TRD2-
TRD3+
TRD3-
http://hobi-elektronika.net
INVENTEC
TITLE
KiliManjaro
LAN CONTROLLER
SIZE A3
CODE CS
DOC. NUMBER Model_No
REV X01
CHANGE by Erison
11-Oct-2007
SHEET 40 OF 58

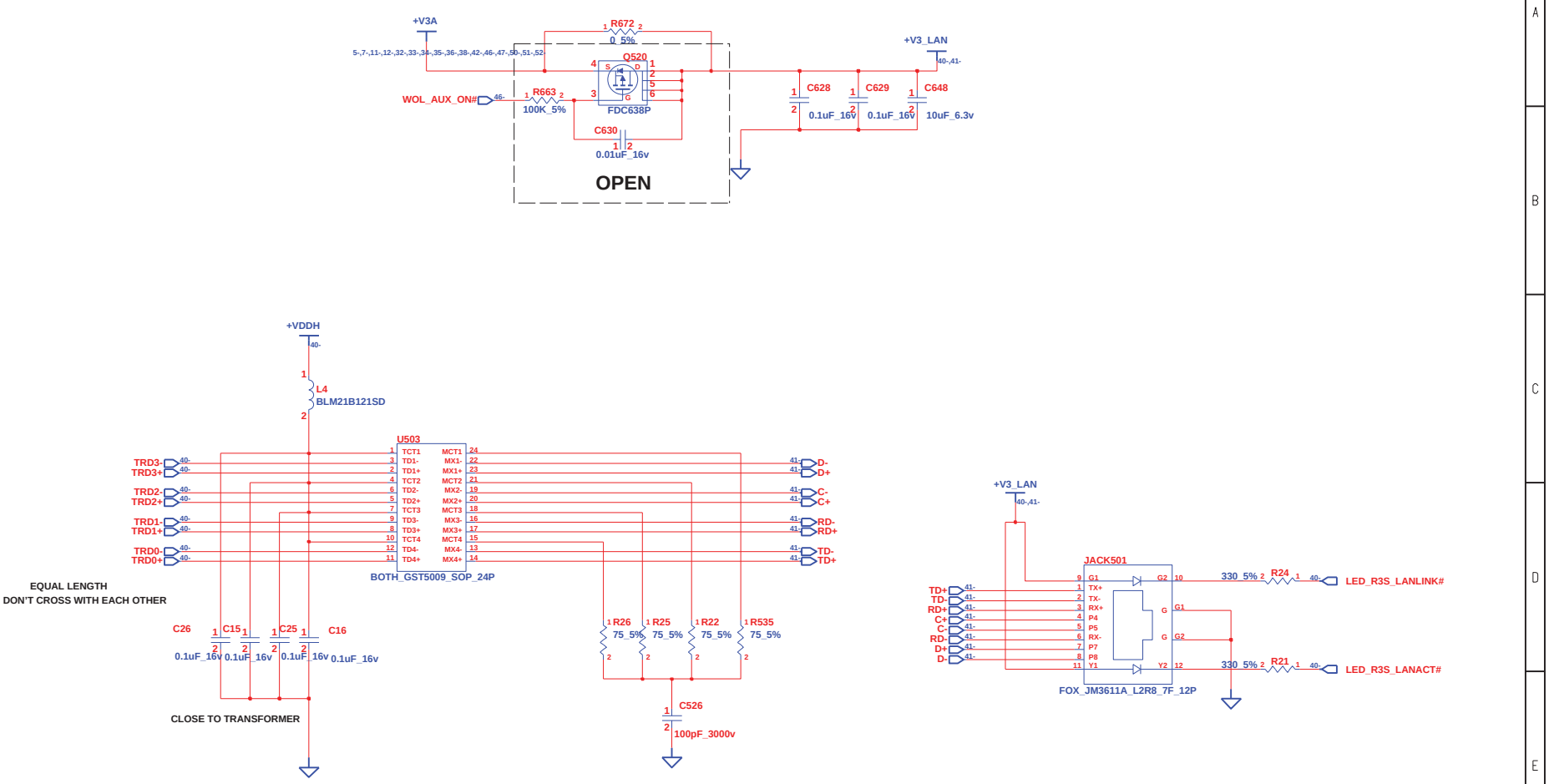

http://hobi-elektronika.net

CHANGE by	Erison	2-Oct-2007	

INVENTEC

TITLE: KiliManjaro RJ45 CONN

SIZE	CODE	DOC. NUMBER	REV
A3	CS	Model_No	X01

SHEET 41 OF 58

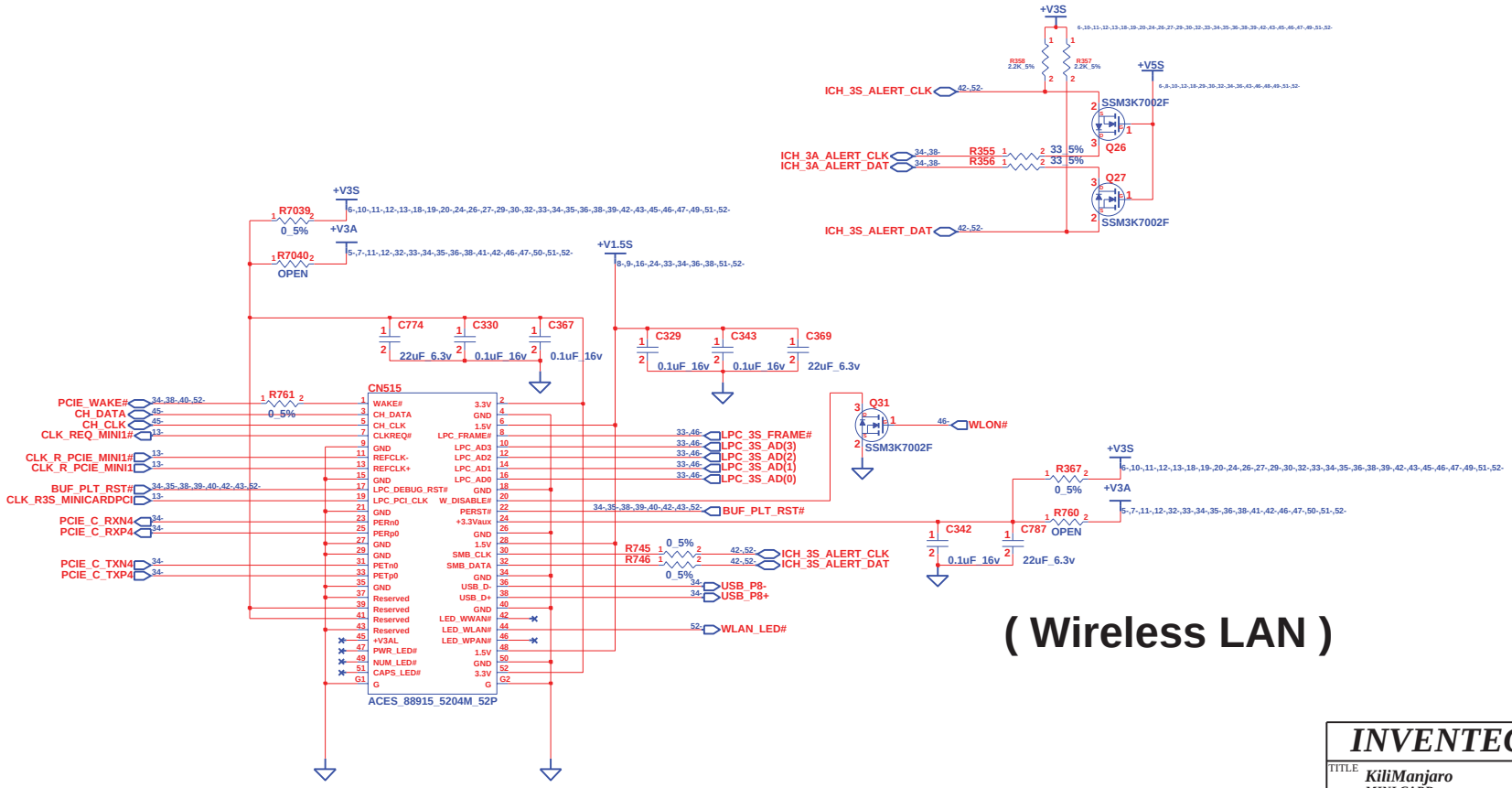

(Wireless LAN)

http://hobi-elektronika.net

INVENTEC			
TITLE KiliManjaro MINI CARD			
SIZE A3	CODE CS	DOC. NUMBER Model_No	REV X01
CHANGE by Erison	2-Oct-2007	SHEET 42 OF 58	

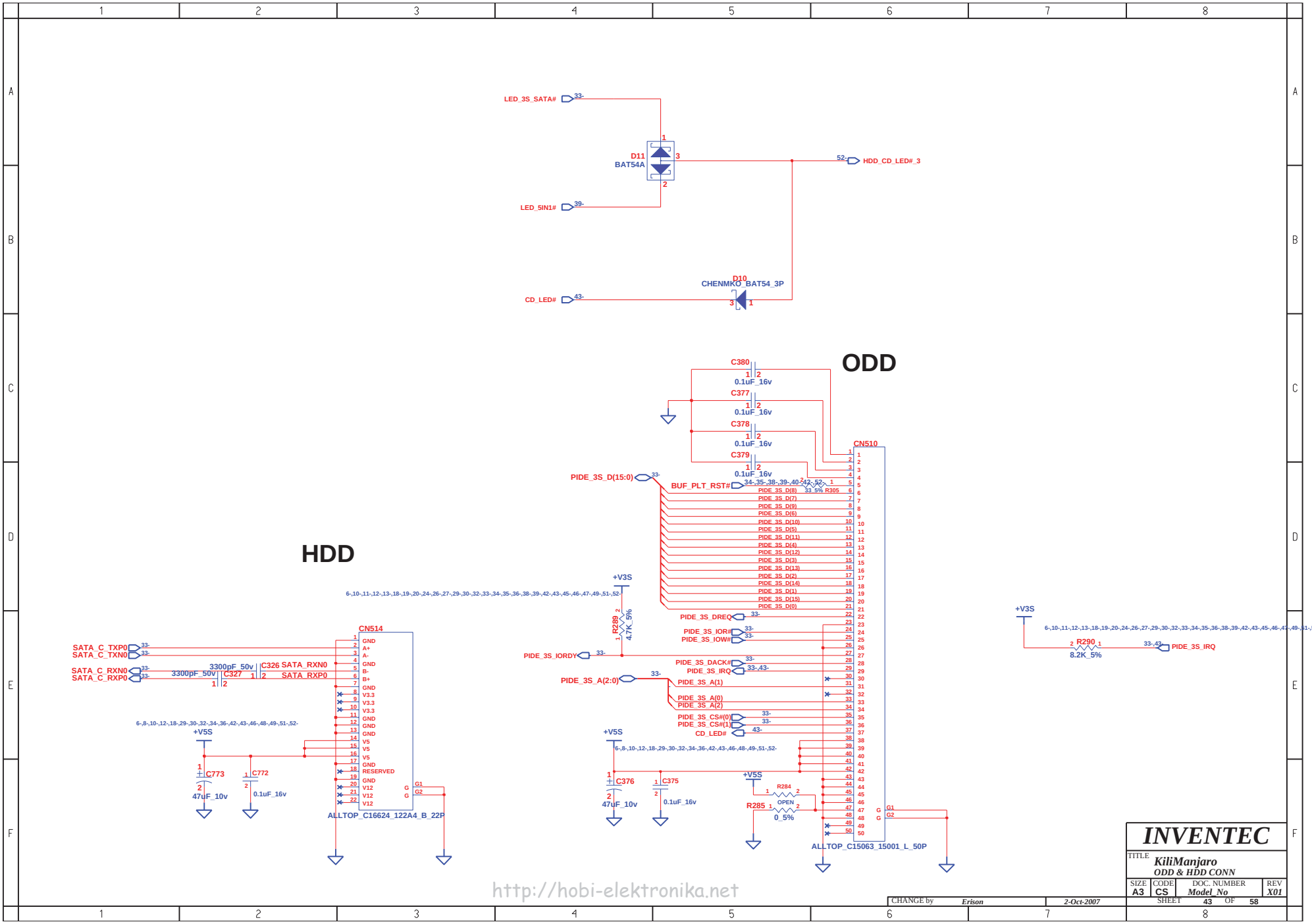
LED_3S_SATA#
D11
BAT54A
HDD_CD_LED#_3
LED_5IN1#
D10
CHENMKO_BAT54_3P
CD_LED#
ODD
C380
0.1uF_16v
C377
0.1uF_16v
C378
0.1uF_16v
C379
0.1uF_16v
CN510
PIDE_3S_D(15:0)
BUF_PLT_RST#
R305
33_5%
PIDE_3S_D(8)
PIDE_3S_D(7)
PIDE_3S_D(9)
PIDE_3S_D(6)
PIDE_3S_D(10)
PIDE_3S_D(5)
PIDE_3S_D(11)
PIDE_3S_D(4)
PIDE_3S_D(12)
PIDE_3S_D(3)
PIDE_3S_D(13)
PIDE_3S_D(2)
PIDE_3S_D(14)
PIDE_3S_D(1)
PIDE_3S_D(15)
PIDE_3S_D(0)
PIDE_3S_DREQ
PIDE_3S_IOR#
PIDE_3S_IOW#
PIDE_3S_IORDY
PIDE_3S_DACK#
PIDE_3S_IRQ
PIDE_3S_A(2:0)
PIDE_3S_A(1)
PIDE_3S_A(0)
PIDE_3S_A(2)
PIDE_3S_CS#(0)
PIDE_3S_CS#(1)
CD_LED#
+V3S
R289
4.7K_5%
R290
8.2K_5%
PIDE_3S_IRQ
HDD
CN514
SATA_C_TXP0
SATA_C_TXN0
SATA_C_RXN0
SATA_C_RXP0
3300pF_50v
C326
SATA_RXN0
3300pF_50V
C327
SATA_RXP0
+V5S
C773
47uF_10v
C772
0.1uF_16v
ALLTOP_C16624_122A4_B_22P
C376
47uF_10v
C375
0.1uF_16v
R284
OPEN
R285
0_5%
ALLTOP_C15063_15001_L_50P
http://hobi-elektronika.net
INVENTEC
TITLE
KiliManjaro
ODD & HDD CONN
SIZE A3
CODE CS
DOC. NUMBER Model_No
REV X01
CHANGE by Erison
2-Oct-2007
SHEET 43 OF 58

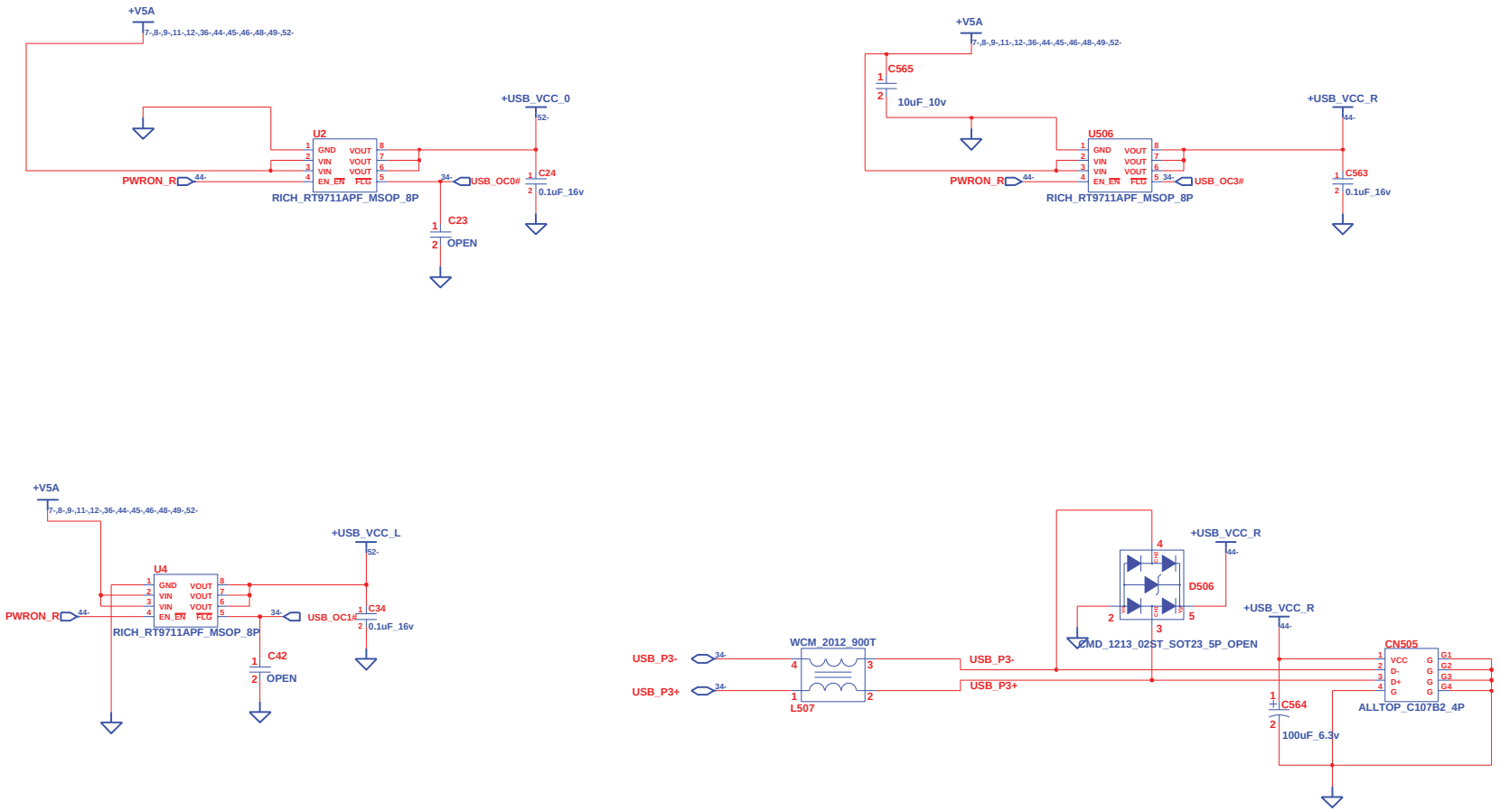

USB POWER STATE	S0	S3	S5
AC MODE	ON	ON	OFF
DC MODE	ON	ON	OFF

http://hobi-elektronika.net

INVENTEC

TITLE *KiliManjaro*
USB CONN

SIZE	CODE	DOC. NUMBER	REV
A3	CS	*Model_No*	*X01*

CHANGE by *Erison* *11-Jan-2008*

SHEET 44 OF 58

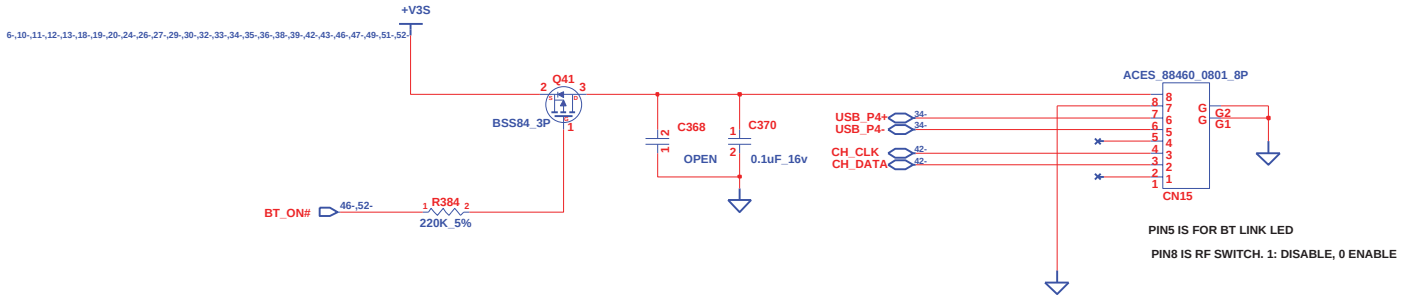

BLUE TOOTH

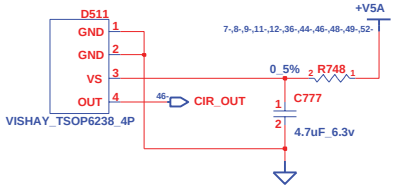

CIR

http://hobi-elektronika.net

CHANGE by	Erison	2-Oct-2007	

INVENTEC

TITLE *KiliManjaro BLUETOOTH*

SIZE	CODE	DOC. NUMBER	REV
A3	CS	Model_No	X01

SHEET 45 OF 58

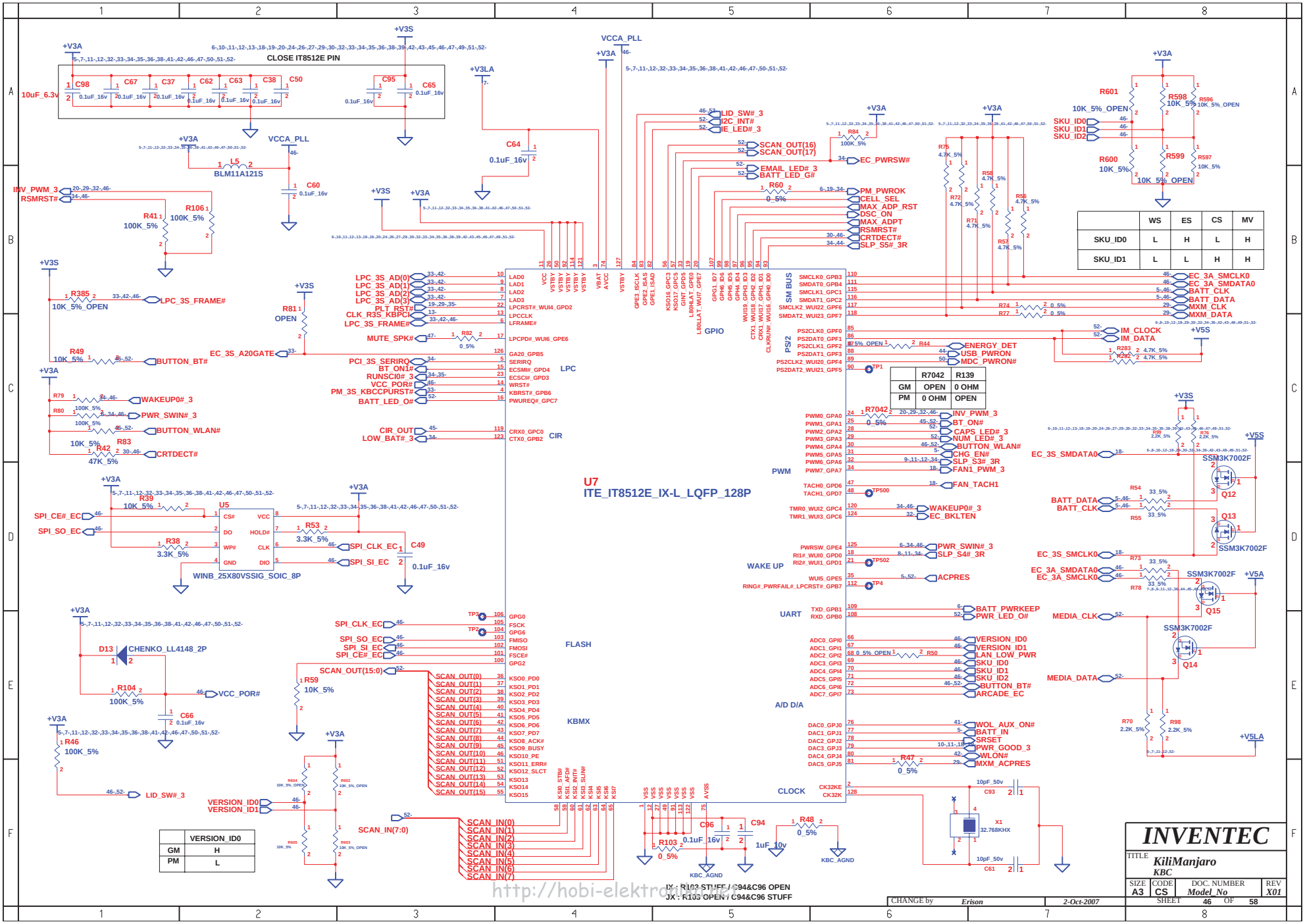

	WS	ES	CS	MV
SKU_ID0	L	H	L	H
SKU_ID1	L	L	H	H

	R7042	R139
GM	OPEN	0 OHM
PM	0 OHM	OPEN

	VERSION_ID0
GM	H
PM	L

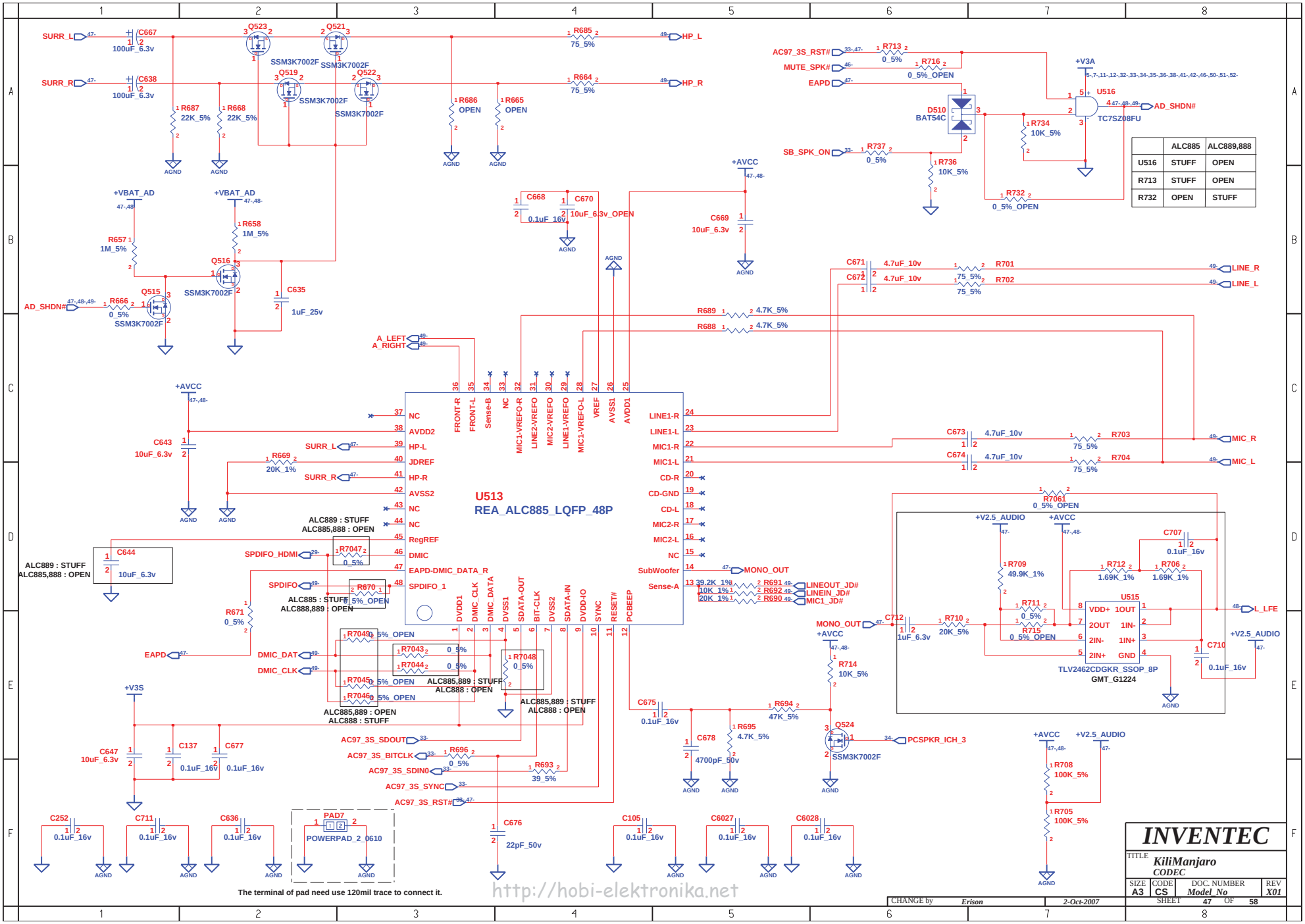

	ALC885	ALC889,888
U516	STUFF	OPEN
R713	STUFF	OPEN
R732	OPEN	STUFF

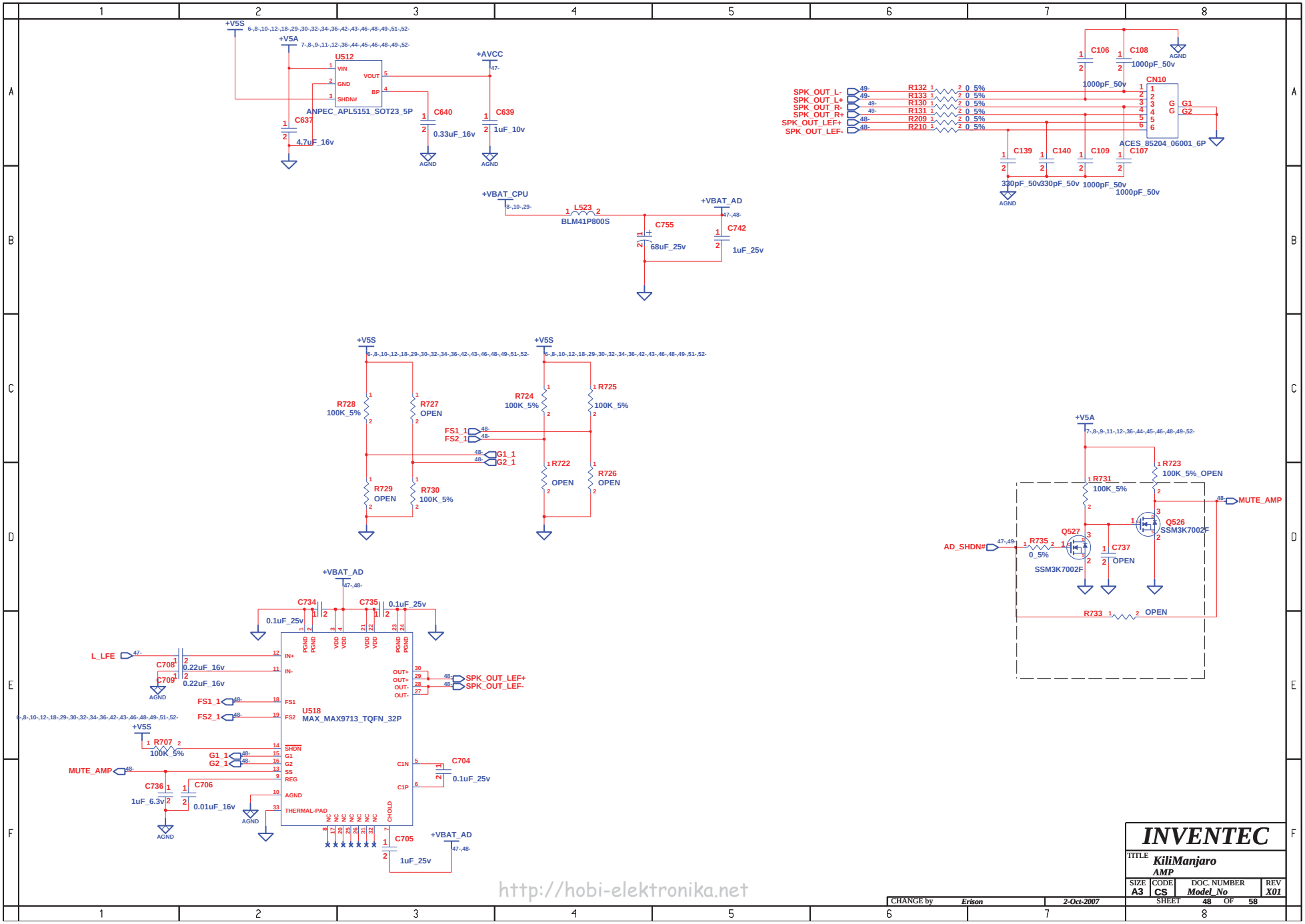
+V5S
+V5A
U512
VIN
GND
SHDN#
VOUT
BP
ANPEC_APL5151_SOT23_5P
C637
4.7uF_16v
C640
0.33uF_16v
+AVCC
C639
1uF_10v
AGND
C106
C108
1000pF_50v
CN10
SPK_OUT_L-
SPK_OUT_L+
SPK_OUT_R-
SPK_OUT_R+
SPK_OUT_LEF+
SPK_OUT_LEF-
R132
R133
R130
R131
R209
R210
0_5%
G1
G2
ACES_85204_06001_6P
C139
C140
C109
C107
330pF_50v
+VBAT_CPU
L523
BLM41P800S
+VBAT_AD
C755
68uF_25v
C742
1uF_25v
R728
100K_5%
R727
OPEN
R729
R730
R724
R725
R722
R726
FS1_1
FS2_1
G1_1
G2_1
+V5A
R723
100K_5%_OPEN
R731
MUTE_AMP
Q526
SSM3K7002F
Q527
AD_SHDN#
R735
C737
R733
C734
C735
0.1uF_25v
L_LFE
C708
C709
0.22uF_16v
U518
MAX_MAX9713_TQFN_32P
IN+
IN-
OUT+
OUT-
SPK_OUT_LEF+
SPK_OUT_LEF-
R707
C704
C736
1uF_6.3v
C706
0.01uF_16v
C705
1uF_25v
THERMAL-PAD
http://hobi-elektronika.net
INVENTEC
TITLE
KiliManjaro
AMP
SIZE
A3
CODE
CS
DOC. NUMBER
Model_No
REV
X01
CHANGE by
Erison
2-Oct-2007
SHEET
48
OF
58

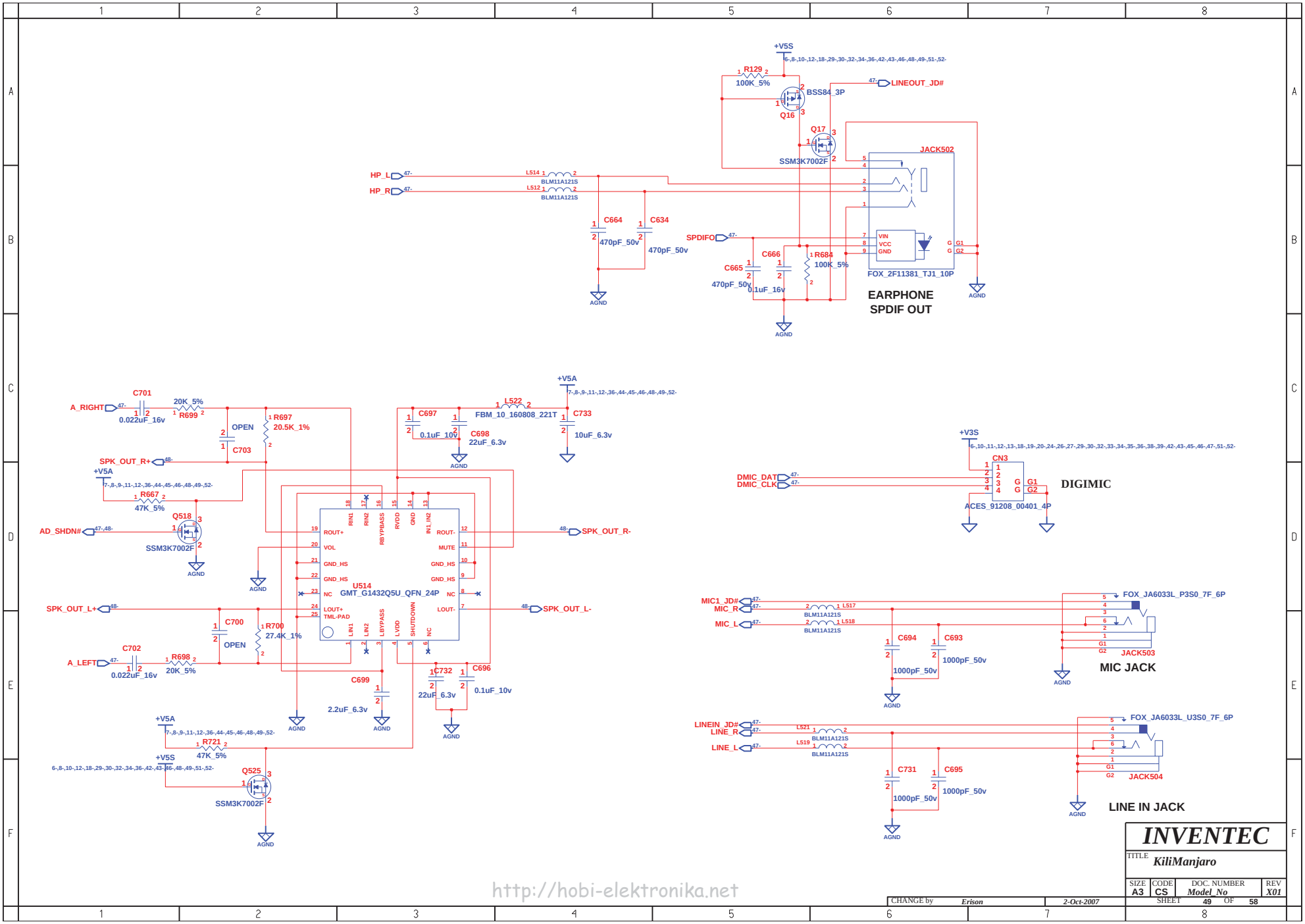
+V5S
R129
100K_5%
BSS84_3P
Q16
LINEOUT_JD#
Q17
SSM3K7002F
JACK502
HP_L
HP_R
L514
L512
BLM11A121S
C664
470pF_50v
C634
470pF_50v
SPDIFO
C666
0.1uF_16v
C665
470pF_50v
R684
100K_5%
VIN
VCC
GND
FOX_2F11381_TJ1_10P
EARPHONE
SPDIF OUT
AGND
+V5A
A_RIGHT
C701
0.022uF_16v
20K_5%
R699
OPEN
C703
R697
20.5K_1%
C697
0.1uF_10v
C698
22uF_6.3v
L522
FBM_10_160808_221T
C733
10uF_6.3v
SPK_OUT_R+
R667
47K_5%
AD_SHDN#
Q518
SSM3K7002F
U514
GMT_G1432Q5U_QFN_24P
ROUT+
VOL
GND_HS
NC
LOUT+
TML-PAD
RIN1
RIN2
RBYPASS
RVDD
GND
IN1_IN2
ROUT-
MUTE
LOUT-
LIN1
LIN2
LBYPASS
LVDD
SHUTDOWN
SPK_OUT_R-
SPK_OUT_L+
SPK_OUT_L-
C700
OPEN
R700
27.4K_1%
A_LEFT
C702
0.022uF_16v
R698
20K_5%
C699
2.2uF_6.3v
C732
22uF_6.3v
C696
0.1uF_10v
R721
47K_5%
Q525
SSM3K7002F
+V3S
CN3
DMIC_DAT
DMIC_CLK
ACES_91208_00401_4P
DIGIMIC
MIC1_JD#
MIC_R
MIC_L
L517
L518
C694
1000pF_50v
C693
1000pF_50v
FOX_JA6033L_P3S0_7F_6P
JACK503
MIC JACK
LINEIN_JD#
LINE_R
LINE_L
L521
L519
C731
1000pF_50v
C695
1000pF_50v
FOX_JA6033L_U3S0_7F_6P
JACK504
LINE IN JACK
INVENTEC
TITLE
KiliManjaro
SIZE A3
CODE CS
DOC. NUMBER Model_No
REV X01
CHANGE by Erison
2-Oct-2007
SHEET 49 OF 58
http://hobi-elektronika.net

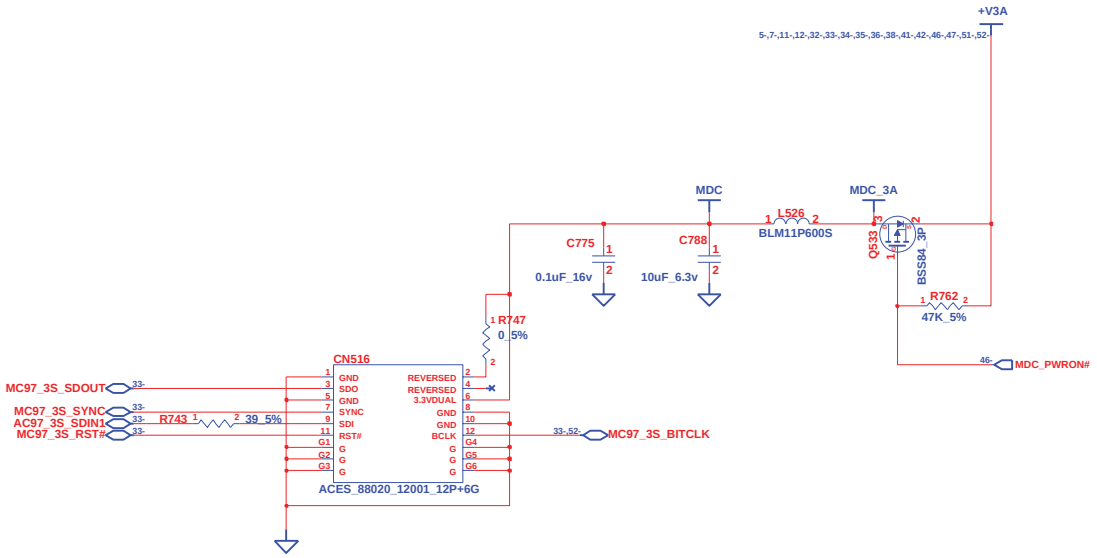

http://hobi-elektronika.net

CHANGE by	Erison	8-Oct-2007	

INVENTEC

TITLE *KiliManjaro MDC*

SIZE	CODE	DOC. NUMBER	REV
A3	CS	Model_No	X01

SHEET 50 OF 58

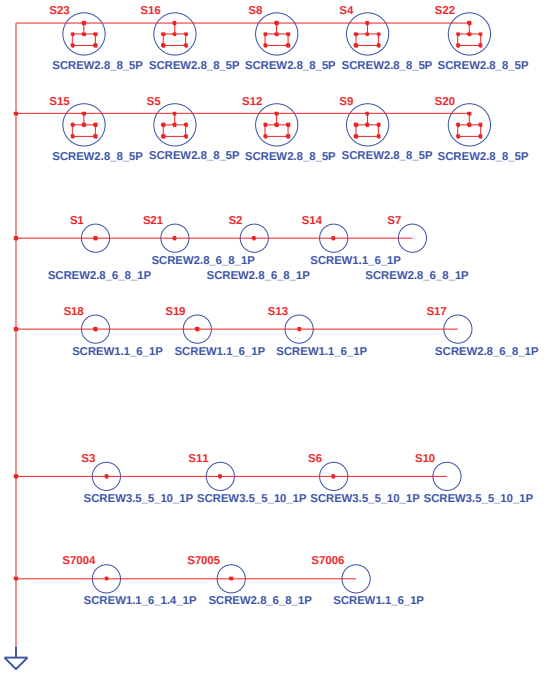

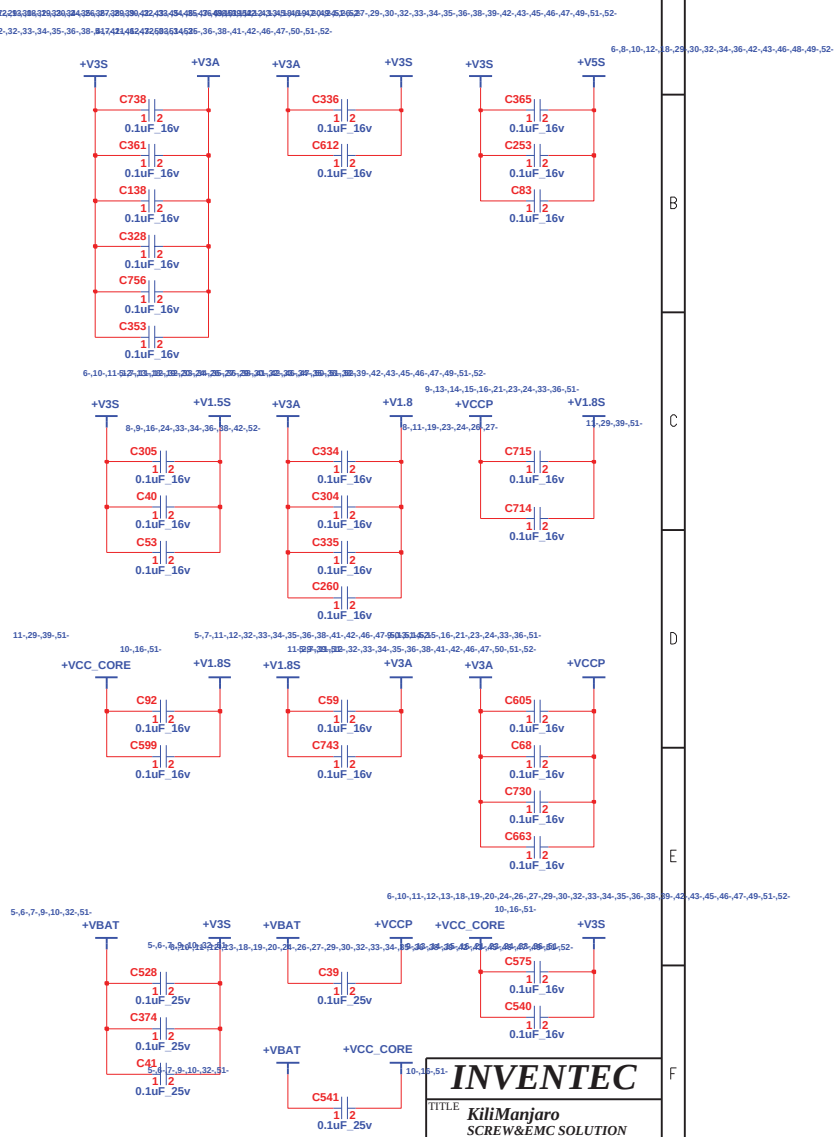

For EMI

http://hobi-elektronika.net

CHANGE by	Erison	31-Jan-2008	

INVENTEC

TITLE KiliManjaro
SCREW&EMC SOLUTION

SIZE	CODE	DOC. NUMBER	REV
A3	CS	Model_No	X01

SHEET 51 OF 58

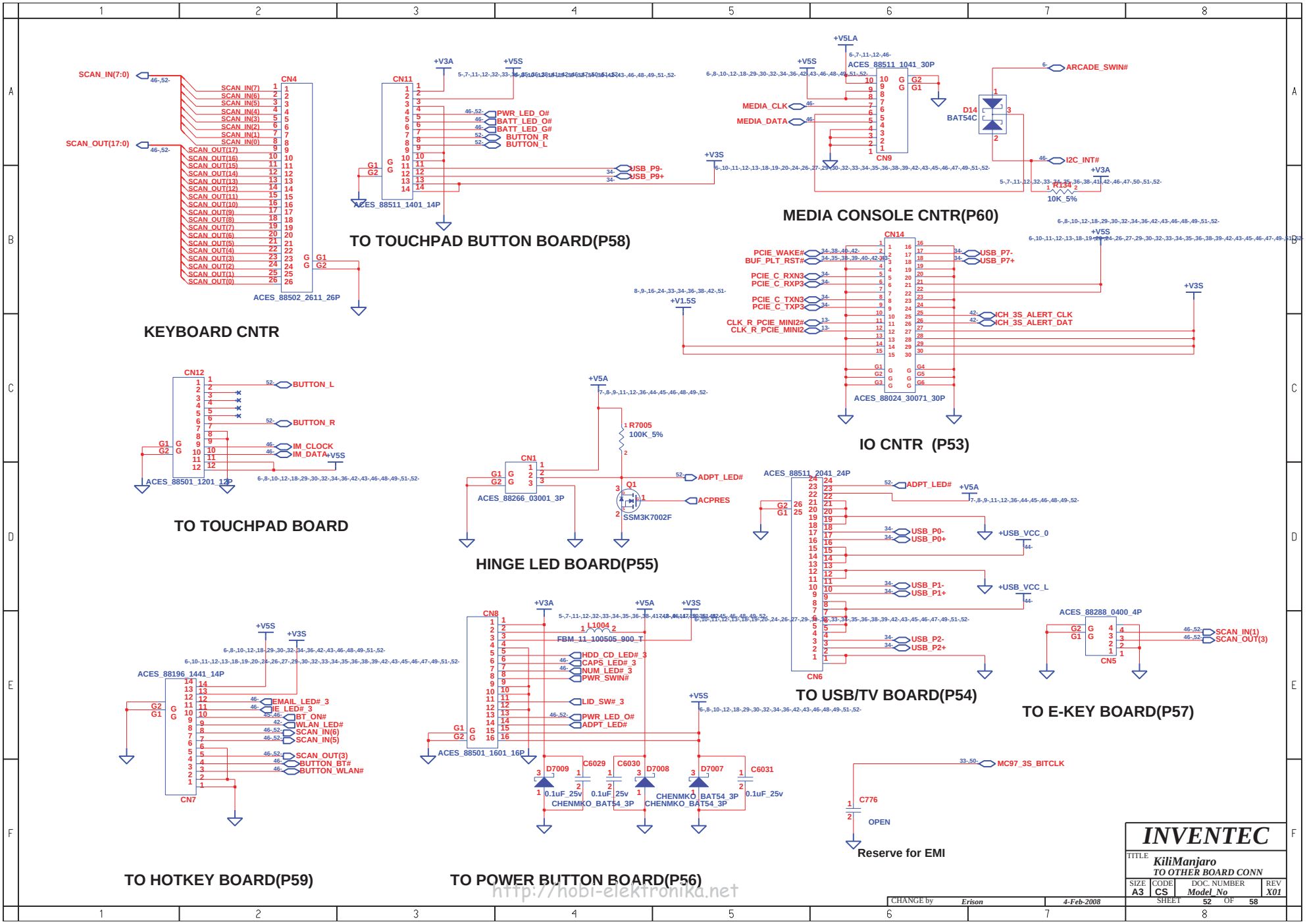
KEYBOARD CNTR
TO TOUCHPAD BUTTON BOARD(P58)
MEDIA CONSOLE CNTR(P60)
IO CNTR (P53)
TO TOUCHPAD BOARD
HINGE LED BOARD(P55)
TO USB/TV BOARD(P54)
TO E-KEY BOARD(P57)
TO HOTKEY BOARD(P59)
TO POWER BUTTON BOARD(P56)
Reserve for EMI
INVENTEC
KiliManjaro
TO OTHER BOARD CONN
CHANGE by Erison
4-Feb-2008
SHEET 52 OF 58

IO BOARD

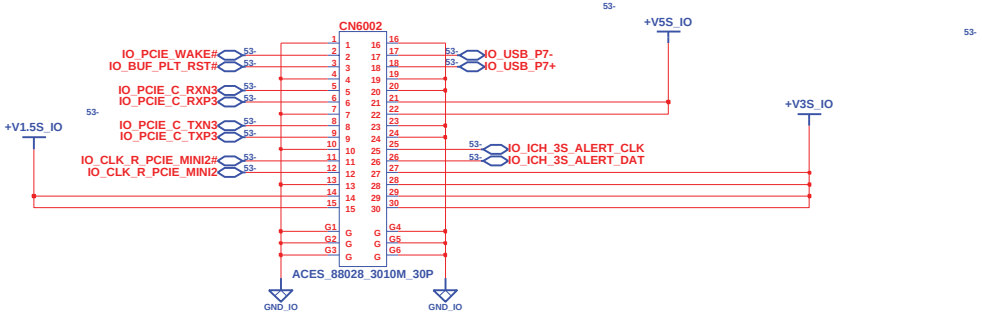

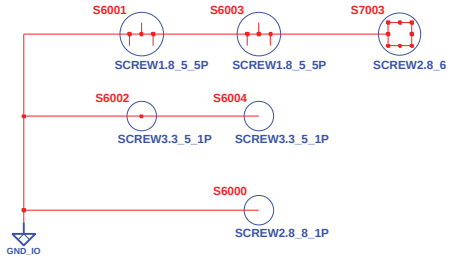

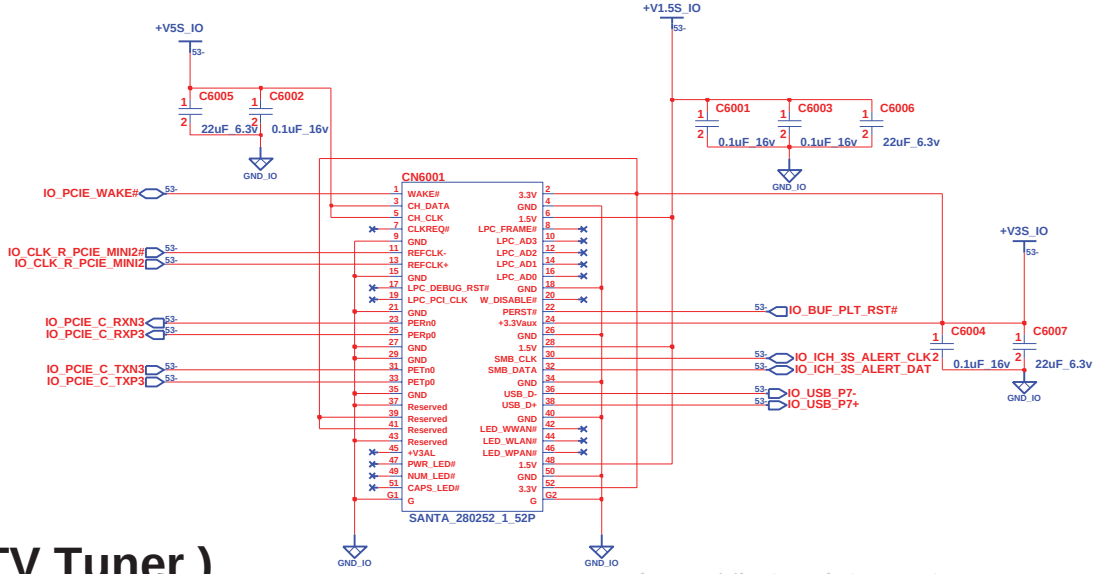

(TV Tuner)

http://hobi-elektronika.net

INVENTEC			
TITLE: KiliManjaro MEDIA BOARD			
SIZE: A3	CODE: CS	DOC. NUMBER: Model_No	REV: X01
CHANGE by: Erison	11-Jan-2008	SHEET 53 OF 58	

USB & TV BOARD

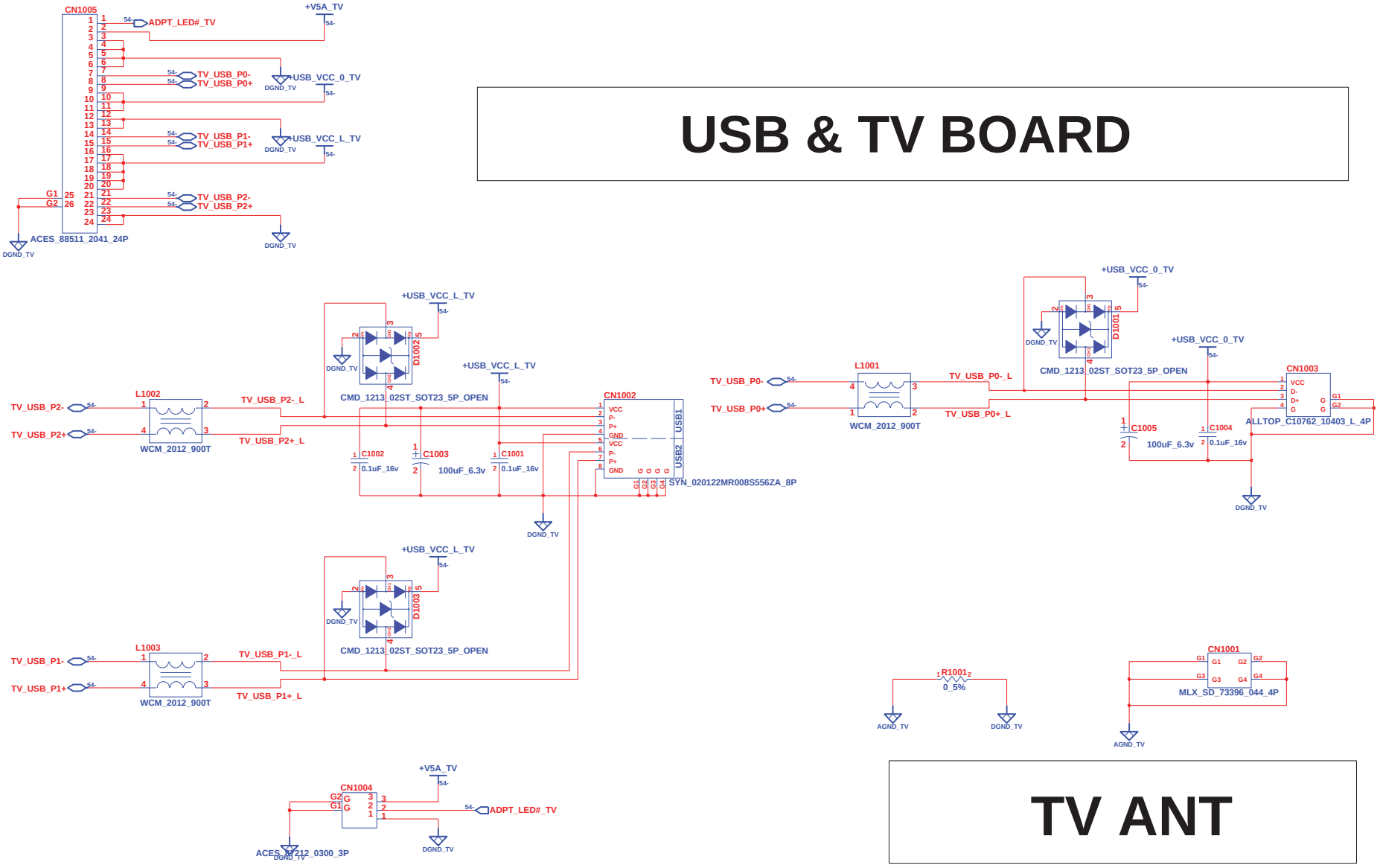

TV ANT

INVENTEC			
TITLE: KiliManjaro USB & TV BOARD			
SIZE A3	CODE CS	DOC. NUMBER Model_No	REV X01
CHANGE by Erison	25-Nov-2007	SHEET 54 OF 58	

http://hobi-elektronika.net

HINGE LED Board 1

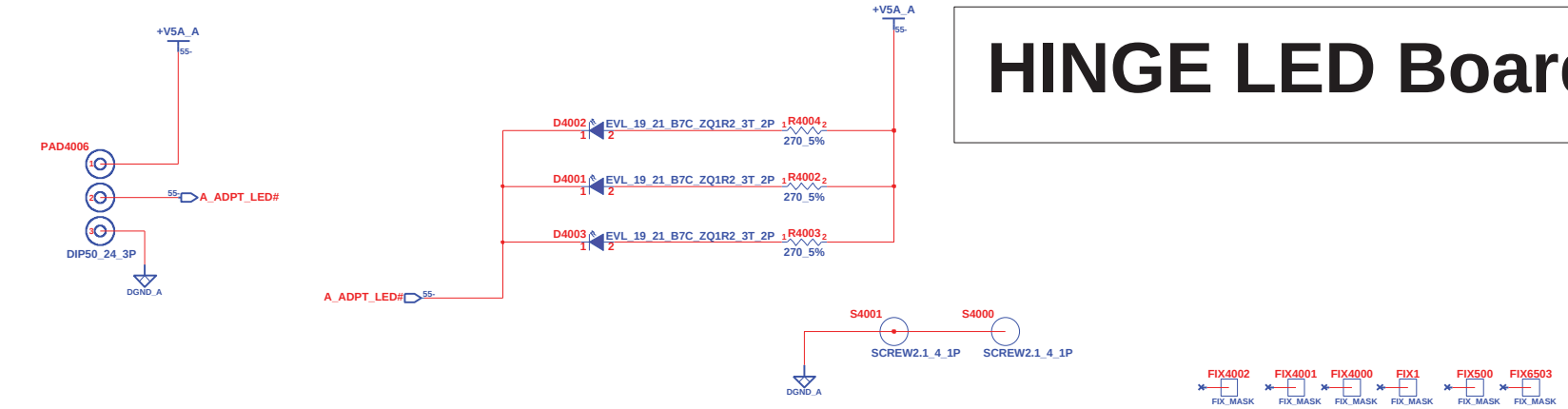

HINGE LED Board 2

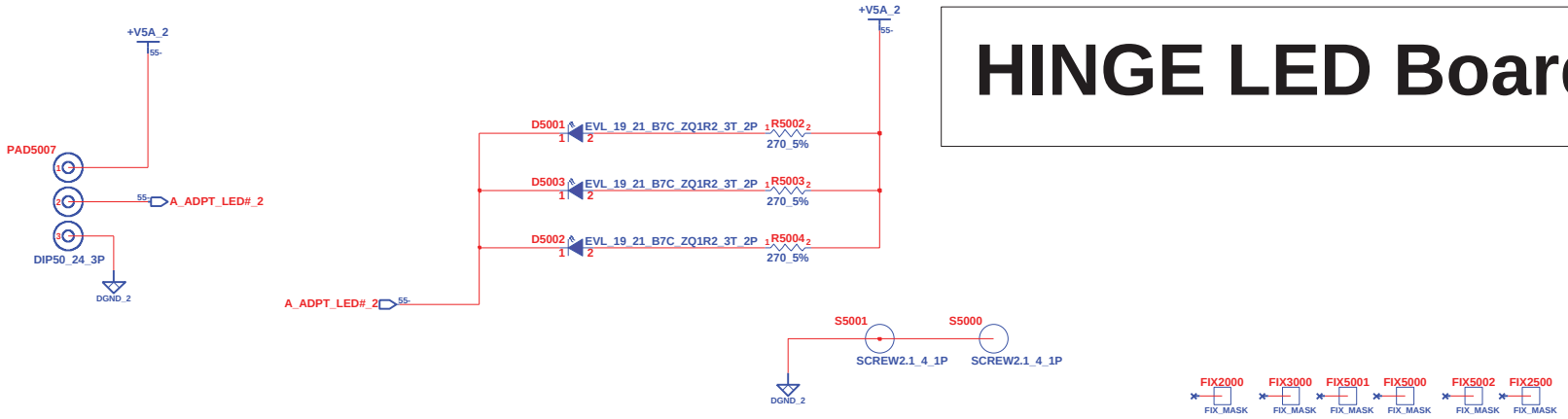

http://hobi-elektronika.net

INVENTEC			
TITLE KiliManjaro LED BOARD			
SIZE A3	CODE CS	DOC. NUMBER Model_No	REV X01
CHANGE by Erison	12-Dec-2007	SHEET 55 OF 58	

PowerButton Board

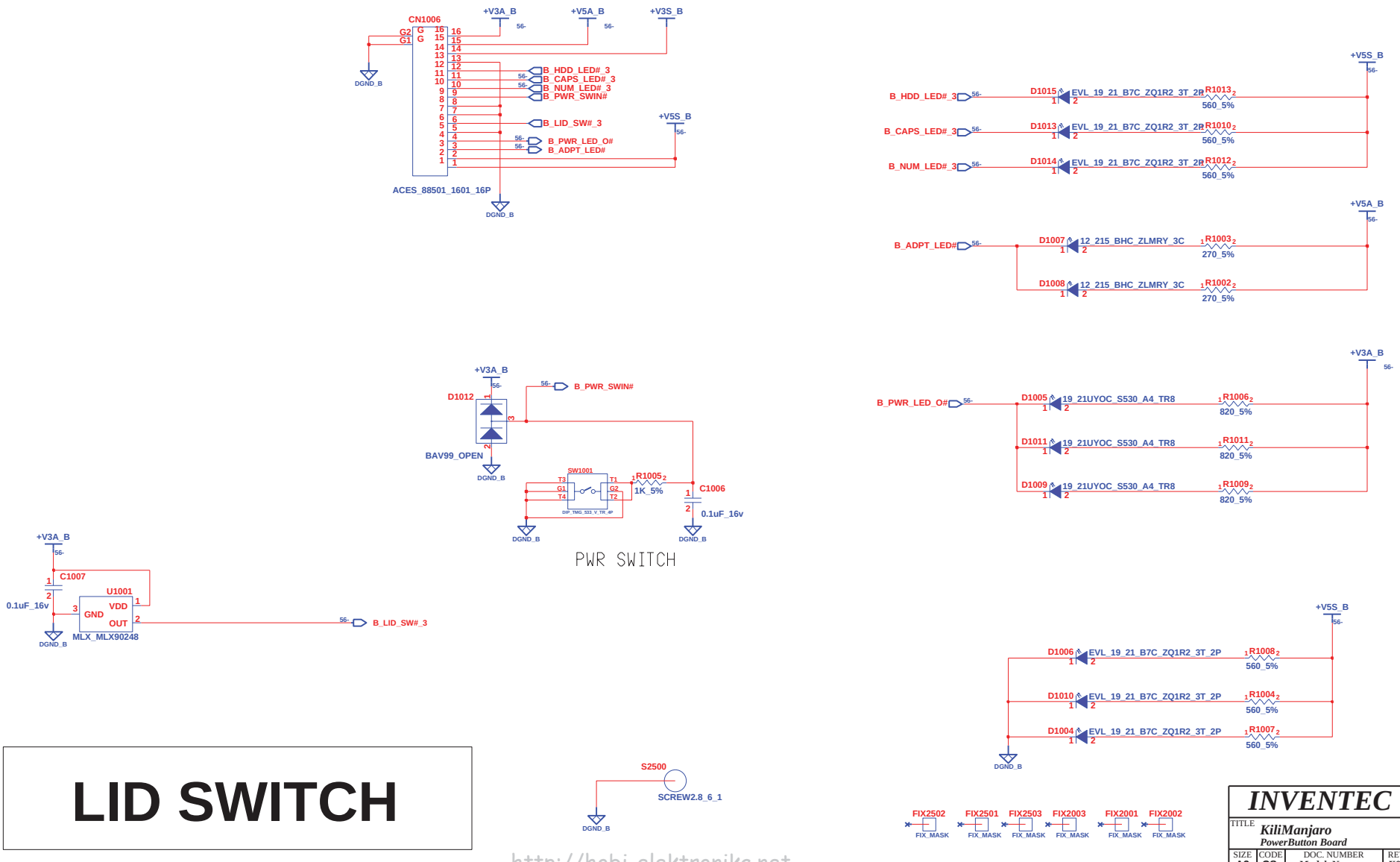

LID SWITCH

http://hobi-elektronika.net

INVENTEC

TITLE KiliManjaro PowerButton Board

SIZE	CODE	DOC. NUMBER	REV
A3	CS	Model_No	X01

CHANGE by Erison 12-Nov-2007

SHEET 56 OF 58

E-KEY Board

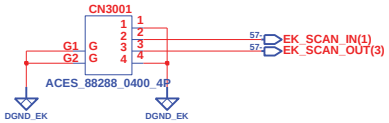

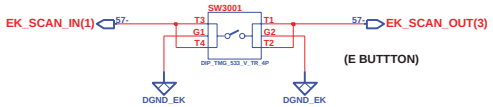

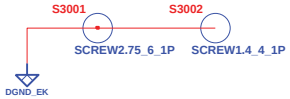

http://hobi-elektronika.net

INVENTEC			
TITLE *KiliManjaro E-KEY BOARD*			
SIZE A3	CODE CS	DOC. NUMBER *Model_No*	REV *X01*
CHANGE by *Erison*	*11-Jan-2008*	SHEET 57 OF 58	

TouchButton Board

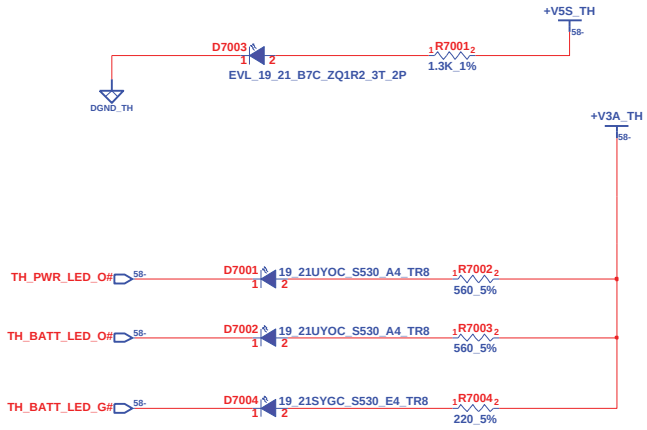

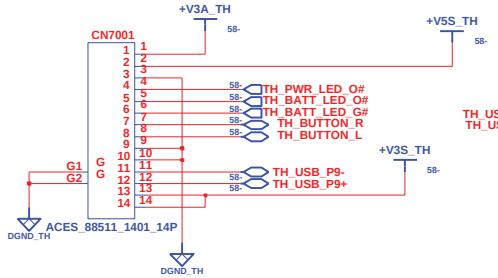

TO MAIN-BOARD

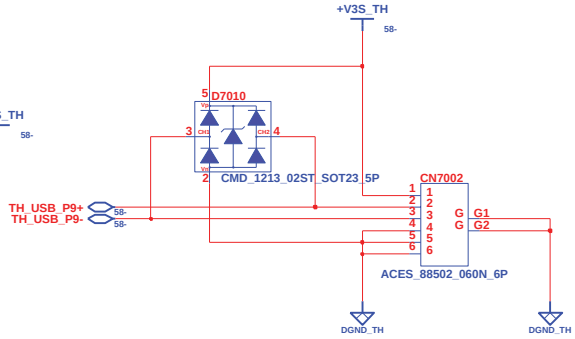

TO FINGERPRINT

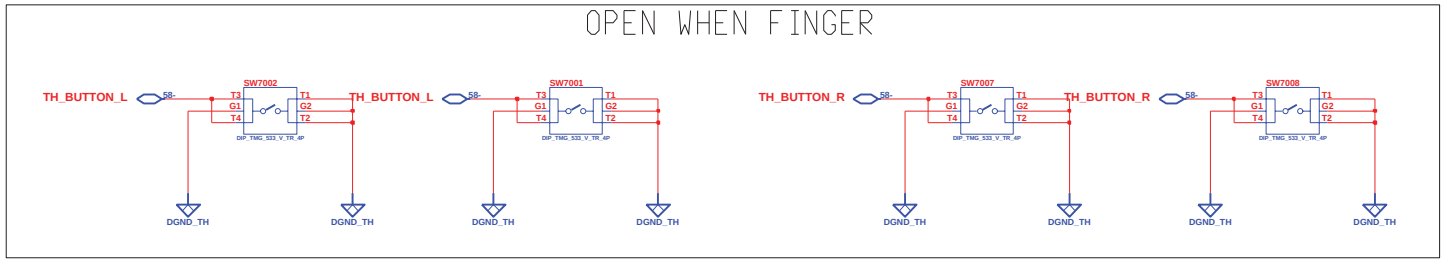

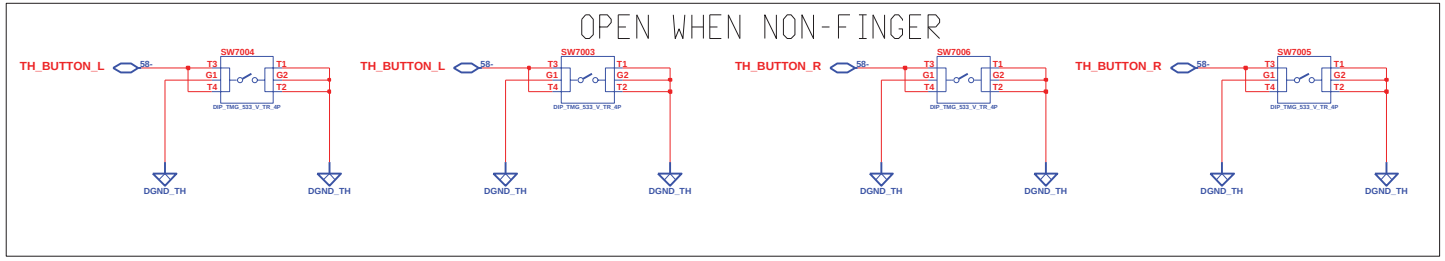

TOUCHPAD BUTTON

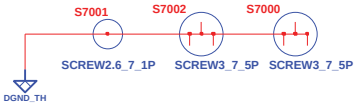

http://hobi-elektronika.net

INVENTEC			
TITLE: KiliManjaro TOUCH BUTTON BOARD			
SIZE A3	CODE CS	DOC. NUMBER Model_No	REV X01
CHANGE by Erison	22-Oct-2007	SHEET 58 OF 58	

Hotkey Board

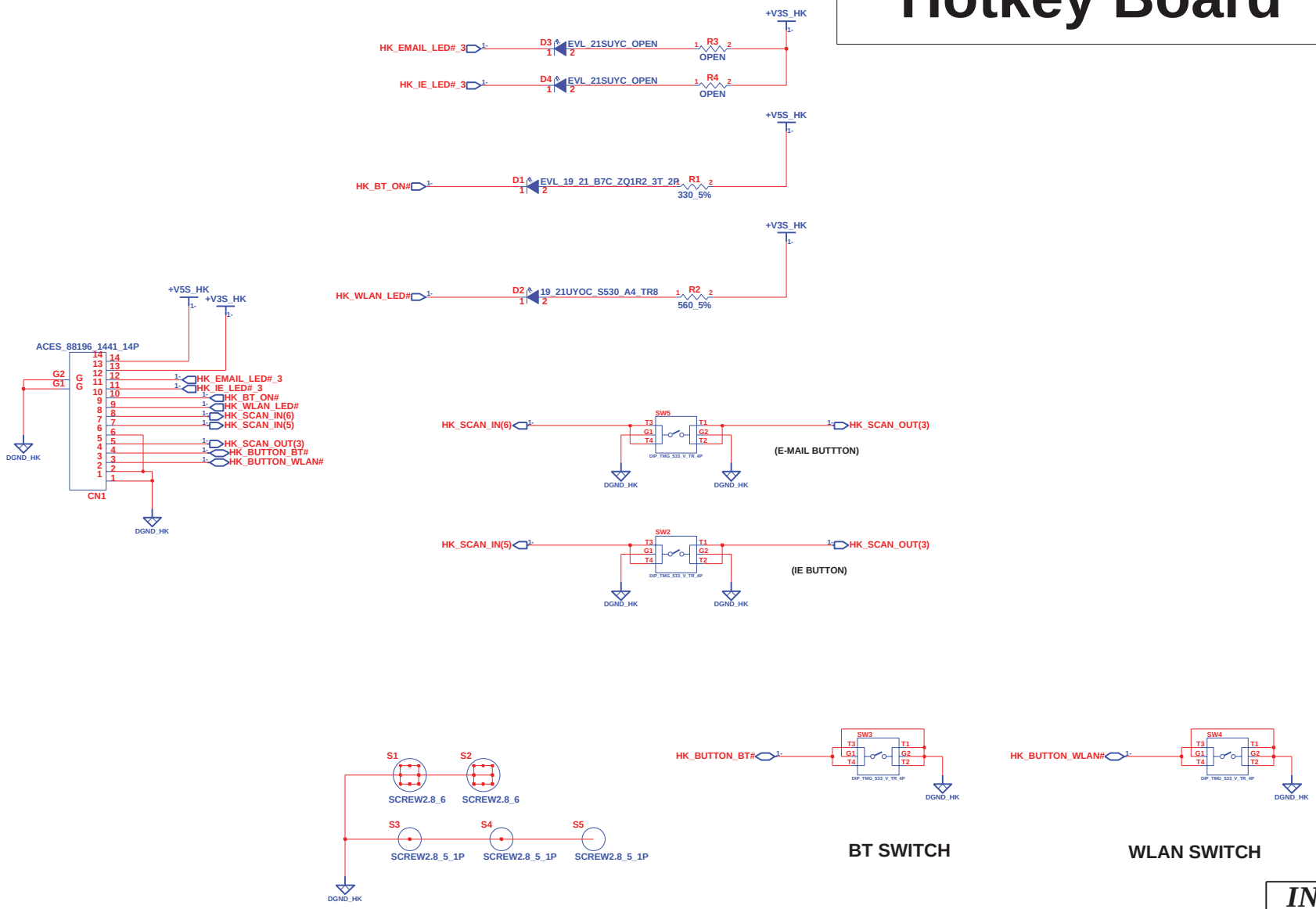

http://hobi-elektronika.net

INVENTEC			
TITLE	KiliManjaro Hotkey Board		
SIZE A3	CODE CS	DOC. NUMBER Model_No	REV X01
CHANGE by Erison	23-Oct-2007	SHEET 1 OF 1	